Z4... + K-Z4 + MDE

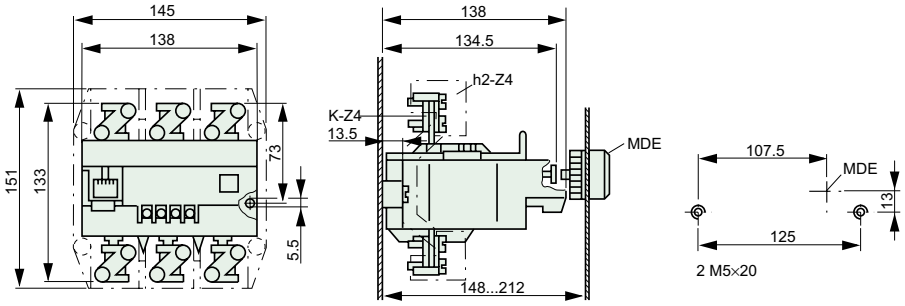

Z4-240/K-NA
Z4-240-CNA

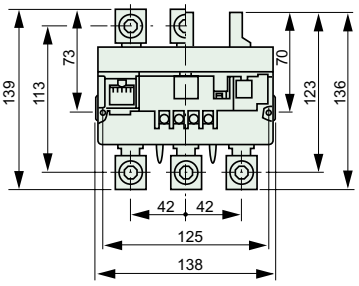

Current transformer operated overload relays

ZW7-... + MDE

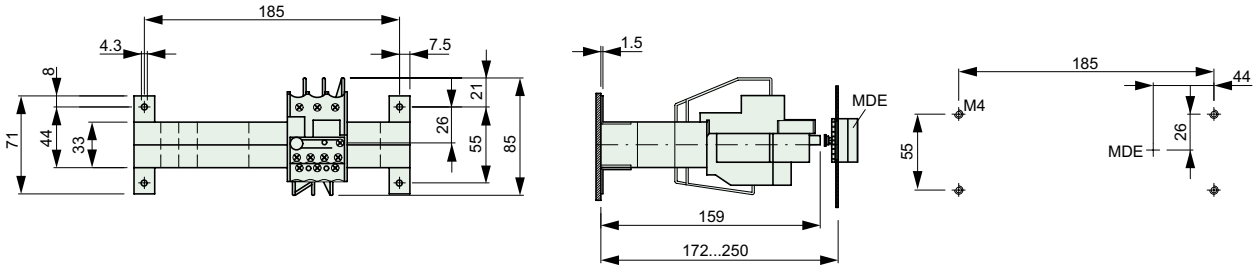

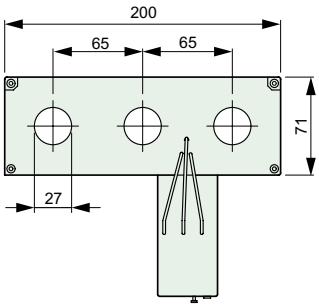

Permissible mounting positions

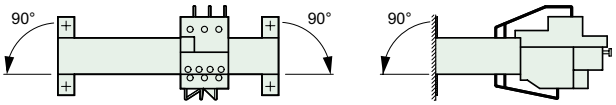

External reset buttons

MDE
MDA

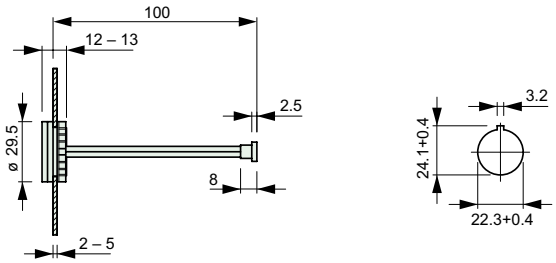
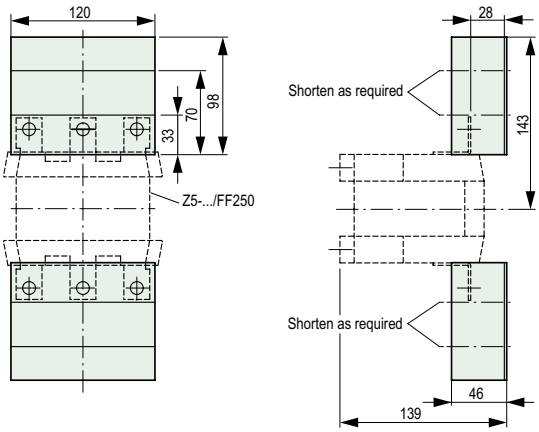
HV DIL 6M