# Electronic motor starters and drives

# Electronic motor starters and drives

## General



### The complete power supply and control programme for motors

As the applications differ, so do the requirements made of the electric drives:

- In the simplest case, the motor is switched with an electromechanical contactor. Combinations consisting of motor protection and line protection are termed motor starter.
- If frequent and/or silent switching is required, contactless semiconductor contactors are used. In addition to conventional line, short-circuit and overload protection, superfast semiconductor fuses are required for type "2" coordination and may be needed for type "1" coordination.
- During DOL starting (star-delta, reversing starter or pole-switching), unwanted current and torque peaks occur. Soft starters eliminate these to ensure gentle starting and prevent an excessive burden on the power source.
- Where an infinitely adjustable speed or a torque adjustment is necessary, frequency inverters (U/f inverters, vector frequency inverters, servo) are used today.

As a general rule, the application determines the drive.

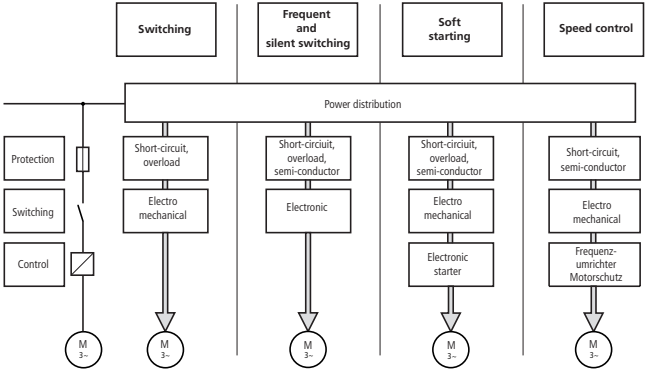


### Three-phase asynchronous motors

A drive task first requires a drive motor whose characteristics with regard to speed, torque and control options are in accord with the set task.

# Electronic motor starters and drives

## General



The three-phase asynchronous motor is the world's most common electric motor. Its popularity is the result of a rugged, simple construction, high degrees of protection, standardized sizes and low cost.

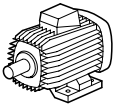

Three-phase motors have typical starting characteristics, with tightening torque $M_A$, pull-out torque $M_K$ and rated-load torque $M_N$.

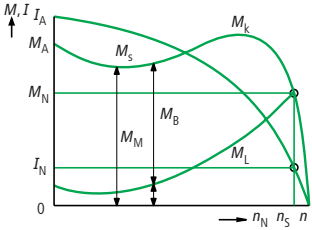


The three-phase motor contains three phase windings that are offset from one another by 120 °/p (p = number of pole pairs). To generate a rotating field in the motor, a voltage is applied to each phase in turn at a time delay of 120 °.

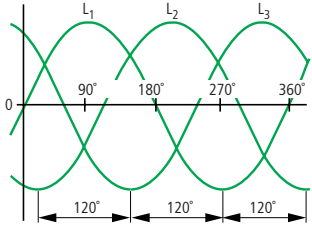


The effect of induction produces the rotating field and a torque in the rotor winding. The motor speed is determined by the number of pole pairs and the frequency of the supply voltage. The direction of rotation can be reversed by swapping over two of the supply phases:

$$n_s = \frac{f \times 60}{p}$$

$n_s$ = Revolutions per minute
$f$ = Frequency of voltage in Hz
p = Number of pole pairs

Example: 4-pole motor (number of pole pairs = 2), mains frequency = 50 Hz, n = 1 500 r.p.m. (synchronous speed, speed of rotating field)
Because of the induction effect, the asynchronous motor's rotor can not reach the rotating field's synchronous speed even at idle. The difference between synchronous speed and rotor speed is termed *slip*.

Slip speed:

$$S = \frac{n_s - n}{n_s}$$

Speed of an asynchronous machine:

$$n = \frac{f \times 60}{p} (1 - s)$$

The output power is as follows:

$$P_2 = \frac{M \times n}{9550} \qquad \eta = \frac{P_2}{P_2}$$

$$P_1 = U \times I \times \sqrt{3} - \text{p.f.}$$

$P_2$ = Shaft rating in kW
$M$ = Torque in Nm
$n$ = Speed in r.p.m.

# Electronic motor starters and drives

## General



The motor's electrical and mechanical rating are recorded on its nameplate.

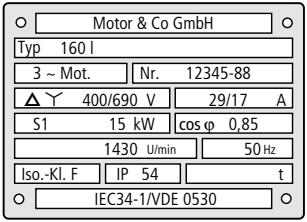


As a rule, three-phase asynchronous motors are connected to their power supply with six terminal bolts. There are basically two connection configurations: star and delta.

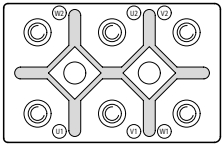


Star connection

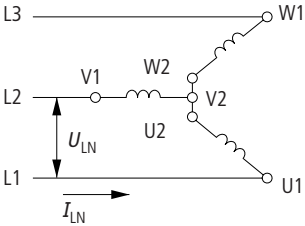


$U_{LN} = \sqrt{3} \times U_W \qquad I_{LN} = I_W$

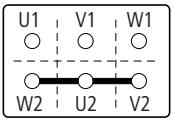


Delta connection

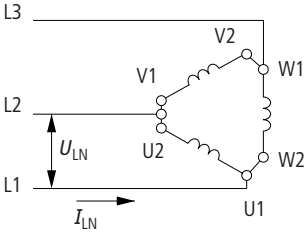


$U_{LN} = U_W \qquad I_{LN} = \sqrt{3} \times I_W$

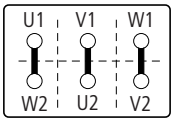


**Note:**

In continuous operation, the mains voltage must be the same as the motor's rated voltage.

# Electronic motor starters and drives

## General



### Starting and operating methods

The most important starting and operating methods for three-phase asynchronous motors include:

| DOL starting (electromechanical) | Star-delta circuit (electromechanical) |
|---|---|
| 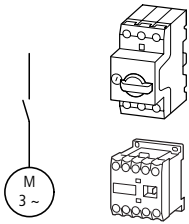 | 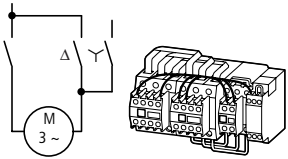 |
| $M \sim I$, $n$ = constant | $M_{Y} \sim \frac{1}{3} M_{\Delta}$, $n$ = constant |
| 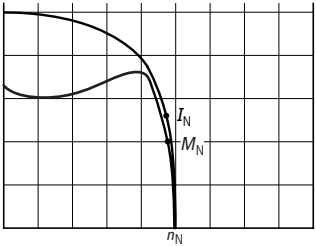 | 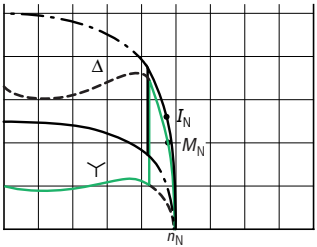 |
| 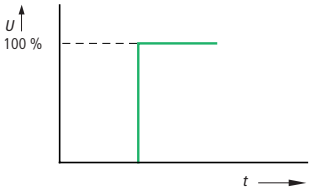 | 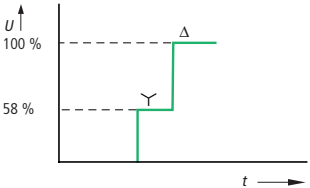 |

# Electronic motor starters and drives

## General

2

| Soft starter and semiconductor contactor (electronic) | Frequency inverter (electronic) |
|---|---|

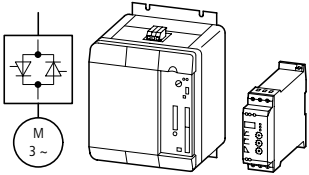


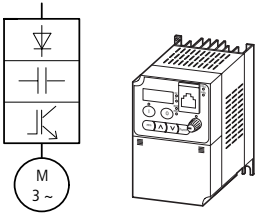


$M \sim U^2$, $n$ = constant

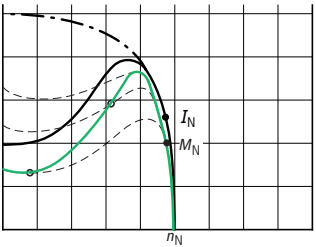


$M \sim U/f$, $n$ = variable

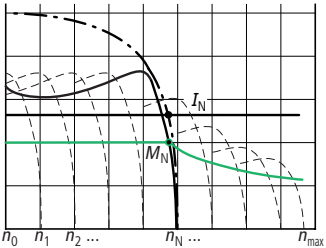


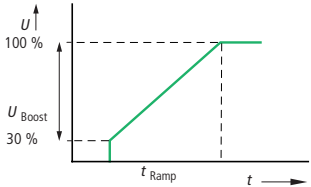


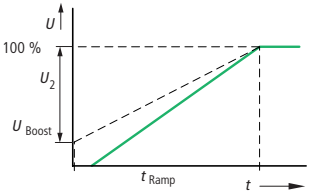


$U_{Boost}$ = Start pedestal (adjustable)
$t_{Ramp}$ = Ramp time (adjustable)

$U_2$ = Output voltage (adjustable)
$U_{Boost}$ = Start pedestal (adjustable)
$t_{Ramp}$ = Ramp time (adjustable)

# Electronic motor starters and drives

## Basics of drives engineering



### Power electronics devices

The power electronics devices provide infinitely variable adjustment of physical variables – such as speed or torque – to the application process. The power is drawn from the electrical mains, converted in the power electronics apparatus and fed to the consumer (i.e. the motor).

**Semiconductor contactors**
Semiconductor contactor allow fast, silent switching of three-phase motors and resistive loads. Switching takes place automatically at the ideal point in time and suppresses unwanted current and voltage peaks.

**Soft starters**
Soft starters ramp the voltage fed to the motor up to mains voltage, so that the motor starts almost jolt-free. The voltage reduction leads to a square-law torque reduction in relation to the motor's normal starting torque. Soft starter are therefore especially well suited to starting loads with a square-law speed or torque characteristic (such as pumps or fans).

**Frequency inverters**
Frequency inverters convert the AC or three-phase system with its constant voltage and frequency into a new, three-phase system with variable voltage and frequency. This voltage/frequency control enables stepless speed control of three-phase motors. The controlled drive can be operated at rated-load torque even at low speeds.

**Vector frequency inverters**
While conventional frequency inverters control three-phase motors using a charactieristic-controlled *U*/*f* (voltage/frequency) relationship, vector frequency inverters work using a sensorless, flow-oriented control of the motor's magnetic field. The controlled variable is the motor current. This allows an opimized control of the torque for demanding applications (mixers and agitators, extruders, transport and conveying installations).

# Electronic motor starters and drives

## Basics of drives engineering



### Moeller drives

| Designation | Model | Rated current [A] | Mains supply voltage [V] | Assigned motor rating [kW] |
|---|---|---|---|---|
| Semiconductor contactor for resistive and inductive load | DS4-140-H | 10–50 | 1 AC 110–500 | – |
| Soft starter | DS4-340-M | 6–23 | 3 AC 110–500 | 2.2–11 (400 V) |
| Soft starter with bidirectional operation | DS4-340-MR | 6–23 | 3 AC 110–500 | 2.2–11 (400 V) |
| Soft starter with bypass relay | DS4-340-MX, DS4-340-M + DIL | 16–46 | 3 AC 110–500 | 7.5–22 (400 V) |
| Soft starter with bypass relay and bidirectional operation | DS4-340-MXR | 16–31 | 3 AC 110–500 | 7.5–15 (400 V) |
| Soft starters (in-line connection type) | DM4-340... | 16–900 | 3 AC 230 – 460 | 7.5–500 (400 V) |
| Soft starters (delta connection type) | DM4-340... | 16–900 | 3 AC 230 – 460 | 11–900 (400 V) |
| Frequency inverters | DF5-322... | 1.4–10 | 1 AC 230<br>3 AC 230 | 0.18–2.2 (230 V) |
| Frequency inverters | DF5-340... | 1.5–16 | 3 AC 400 | 0.37–7.5 (400 V) |
| Frequency inverters | DF6-340... | 22–230 | 3 AC 400 | 11–132 (400 V) |
| Vector frequency inverters | DV5-322... | 1.4–11 | 1 AC 230<br>3 AC 230 | 0.18–2.2 (230 V) |
| Vector frequency inverters | DV5-340... | 1.5–16 | 3 AC 400 | 0.37–7.5 (400 V) |
| Vector frequency inverters | DV6-340... | 2.5–260 | 3 AC 400 | 0.75–132 (400 V) |

# Electronic motor starters and drives

## Basics of drives engineering



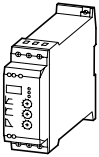

**Semiconductor contactors DS4-…**

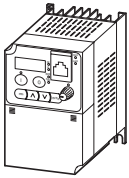

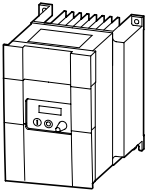

**Frequency inverters DF5-…**
**Vector frequency inverters DV5-…**

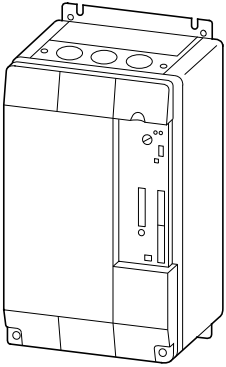

**Soft starters DM4-…**

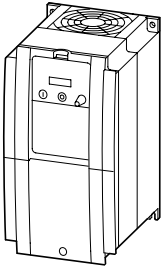

**Frequency inverters DF6-320-…**
**Vector frequency inverters DV6-320-…**

# Electronic motor starters and drives

## Basics of drives engineering



### DOL starting

In the simplest case, and especially at low rated output (up to about 2.2 kW), the three-phase motor is connected directly to mains voltage. In most applications, the connection is made with an electromechanical contactor.

In this control mode, – on the mains at fixed voltage and frequency – the asynchronous motor's speed is only slightly below the synchronous speed [$n_s \sim f$].

Due to rotor slippage, The operating speed [$n$] deviates from this value in relation to the rotating field [$n = n_s \times (1 - s)$], slippage being [$s = (n_s - n)/n_s$].

On starting ($s = 1$), a high starting current occurs, reaching up to ten times the rated current $I_e$.

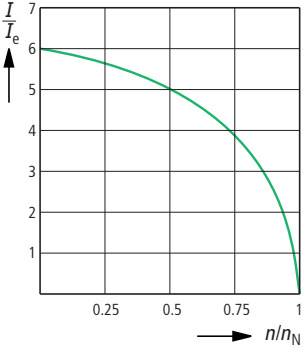


$I/I_e$: 6...10

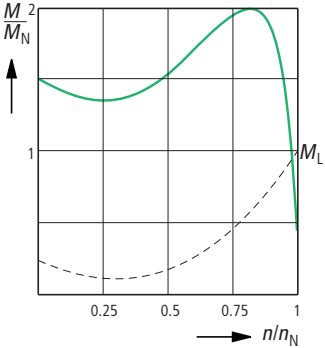


$M/M_N$: 0.25...2.5

**Features of DOL starting**

- For low- and medium-power three-phase motors
- Three connection lines (circuit layout: star or delta)
- High starting torque
- Very high mechanical load
- High current peaks
- Voltage dips
- Simple switching devices

If an application demands frequent and/or silent switching, or if adverse environmental conditions prevent the effective use of electromechanical switching elements, electronic semiconductor contactors are required. In addition to short-circuit and overload protection, the semiconductor contactor must be protected with a superfast fuse. According to IEC/EN 60947, type "2" coordination requires the use of a superfast semiconductor fuse. For type "1" coordination, – the majority of cases – a superfast semiconductor fuse is not necessary. Here are a few examples:

# Electronic motor starters and drives

## Basics of drives engineering

- Building services management:
  - Reversing drive for lift doors
  - Starting heat-exchanger units
  - Starting conveyor belts
- In critical atmospheres:
  - Controlling filling station petrol pump motors
  - Controlling pumps in paint processing plants.
- Other applications: Non-motor-driven loads, such as
  - Heater elements in extruders
  - Heater elements in kilns
  - Controlling lighting systems.



### Motor start in star-delta configuration

The star-delta circuit layout is the most commonly used configuration for starting three-phase motors.

The completely factory prewired SDAINL star-delta combination from Moeller provides convenient motor control. The customer saves on expensive wiring and installation time and reduces the likelihood of faults.

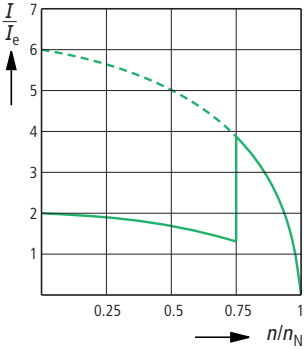


$I/I_e$: 1.5...2.5

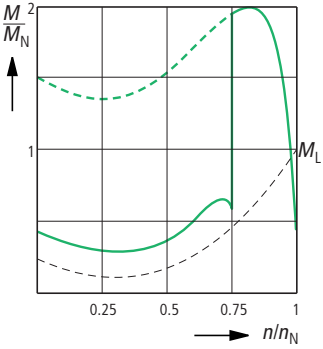


$M/M_N$: 0.5

**Features of star-delta starting**

- For low- to high-power three-phase motors
- Reduced starting current
- Six connection cables
- Reduced starting torque
- Current peak on changeover from star to delta
- Mechanical load on changeover from star to delta

# Electronic motor starters and drives

## Basics of drives engineering



### Soft starters (electronic motor start)

The characteristic curves for DOL and star-delta starting show current and torque step changes, which have a number of negative effects, especially at medium and high motor ratings:

- High mechanical machine loads
- Rapid wear
- Increased servicing costs
- High supply costs from the power supply companies (peak current calculation)
- High mains and generator load
- Voltage dips with a negative effect in other consumers

The ideal scenario of a smooth torque build-up and a controlled current reduction in the starting phase is made possible by the electronic soft starter. Providing infinitely variable control of the three-phase motor's supply voltage in the starting phase, it matches the motor to the load behaviour of the driven machine and accelerates it smoothly. This avoids mechanical jolting and suppresses current peaks. Soft starters present an electronic alternative to the conventional star-delta switch.

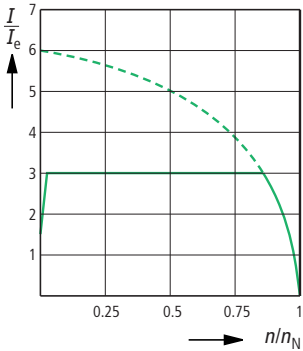


$I/I_e$: 1...5

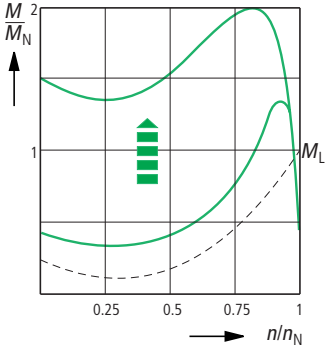


$M/M_N$: 0.15...1

**Features of the soft starters**

- For low- to high-power three-phase motors
- No current peaks
- Zero maintenance
- Reduced adjustable starting torque

### Parallel connection of several motors to a single soft starter

You can also use soft starters to start several motors connected in parallel. This does not, however, allow the behaviour of the individual motors to be controlled. Each motor must be separately fitted with suitable overload protection.

**Note:**
The total current consumption of the connected motors must not exceed the soft starter's rated operational current $I_e$.

**Note:**
Each motor must be individually protected with a thermistor and/or overload relay.

**Caution!**
Switching must not take place in the soft starter's output as the resulting voltage peaks can damage the thyristors in the power section.
Problems may arise during starting if there are significant differences in the connected motors' ratings (for example 1.5 kW and 11 kW): The lower-rated motors may not be able to reach the required torque due to the relatively large ohmic resistance of these motors' stators, requiring a higher voltage during starting.

It is advisable to use this circuit type only with motors of a similar rating.

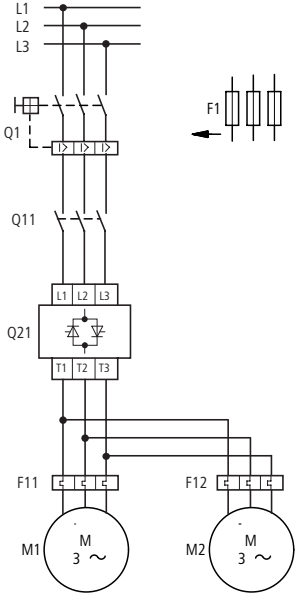

2

### Using soft starters with pole-changing motors

Soft starters can be connected in the supply line before pole-changing, → section "Pole-changing motors", page 8-51).

**Note:**

All changeovers (high/low speed) must take place at standstill.

The start signal must be issued only when a contact sequence has been selected and a start signal for pole-changing was set.

Control is comparable to cascade control with the difference that the changeover is made not to the next motor but to the other winding (TOR = top-of-ramp signal).

### Using soft starters with three-phase slipring motors

When upgrading or modernizing older installations, contactors and rotor resistors of multistage three-phase stator automatic starters can be replaced with soft starters. This is done by removing the rotor resistors and assigned contactors and short-circuiting the sliprings of the motor's rotor. The soft starter is then connected into the incomer and provides stepless starting of the motor. (→ page 2-15).

### Using soft starters for motors with power-factor correction

**Caution!**

No capacitive loads must be connected at the soft starter's output.

Power-factor corrected motors or motor groups must not be started with soft starters. Mains-side compensation is permissible when the ramp time (starting phase) has completed (i.e. the TOR (Top of Ramp) signal has been issued) and the capacitors exhibit a series inductance.

**Note:**

If electronic devices (such as, soft starters, frequency inverters or UPS), use capacitors and correction circuits only with a choke fitted upstream.

→ page 2-16.

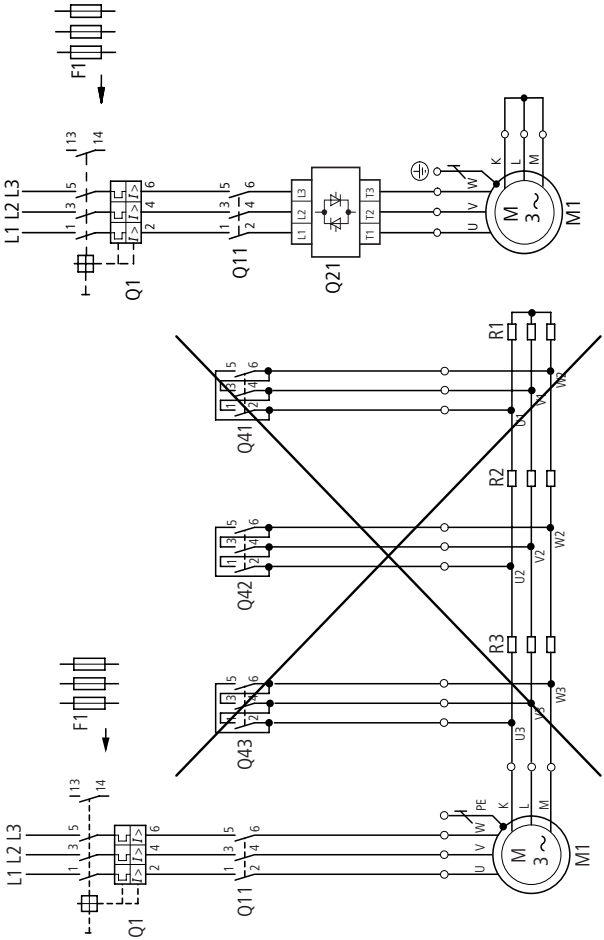

2

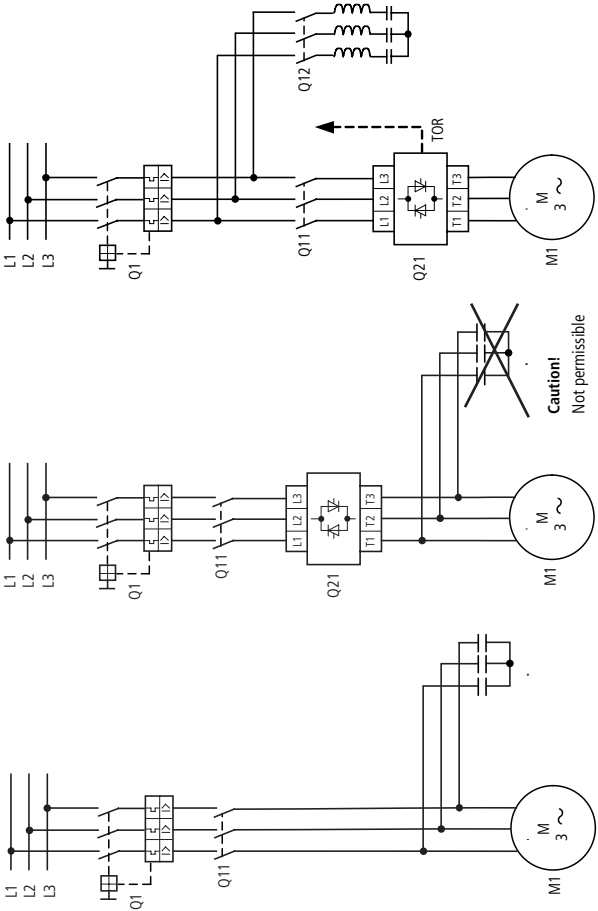

# Electronic motor starters and drives

## Basics of drives engineering



### Connecting star points when using soft starters or semiconductor contactors

**Caution!**

The connection of the star point to the PE or N conductor is not permissible when using controlled semiconductor contactors or soft starters. This applies especially to two-phase-controlled starters.

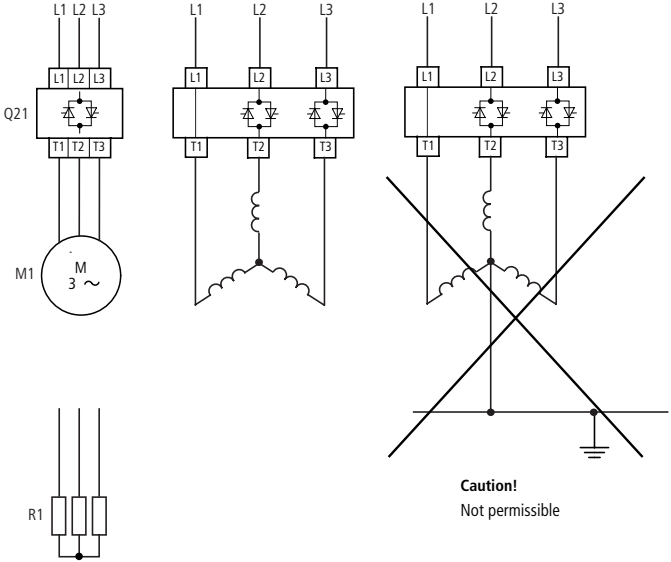

# Electronic motor starters and drives

## Basics of drives engineering



### Soft starters and classification type to IEC/EN 60947-4-3

The following classification types are defined in IEC/EN 60947-4-3, 8.2.5.1:

### Type "1" coordination

In type "1" coordination, the contactor or soft starter must not endanger persons or the installation in the event of a short-circuit and **does not** have to be capable of continued use without repairs or parts replacements.

### Type "2" coordination

In type "2" coordination, the contactor or soft starter must not endanger persons or the installation in the event of a short-circuit and **must** be capable of continued use without repairs or parts replacements. For hybrid control devices and contactors, there is a risk of contact welding. In this case the manufacturer must provide appropriate maintenance instructions.

The coordinated short-circuit protection device (SCPD) must trip in the event of a short-circuit. Blown fuses must be replaced. This is part of normal operation (for the fuse), also for type "2" coordination.

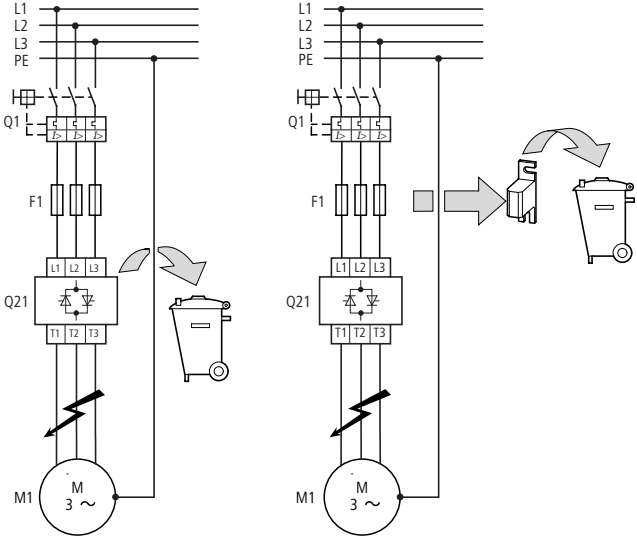

# Electronic motor starters and drives

## Soft starters DS4



### Product attributes

- Construction, mounting and connection as for contactor
- Automatic control voltage detection
  - 24 V DC ± 15 % 110 to 240 V AC ± 15 %
  - Safe starting at 85 % $U_{min}$
- Operation indication by LED
- Individually adjustable start and stop ramps (0.5 to 10 s)
- Adjustable start pedestal (30 to 100 %)
- Relay contact (N/O contact): operating signal, TOR (top of ramp)

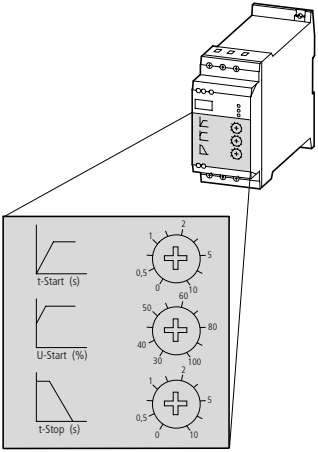

# Electronic motor starters and drives
## Soft starters DS4



### LED displays

The LEDs indicate the operational states as follows:

| Red LED | Green LED | Function |
|---|---|---|
| Lit | Lit | Init, LEDs lit only briefly, Init itself takes about 2 seconds<br>Depending on device:<br>– All devices: LED briefly lit once<br>– DC devices: after a brief pause, the LEDs briefly light up again |
| Off | Off | Device is off |
| Off | Flashing at 2 s intervals | Ready for operation, power supply OK, but no start signal |
| Off | Flashing at 0.5 s interval | Device in operation, ramp is active (soft start or soft stop); on M(X)R the current rotating field direction is also indicated. |
| Off | Lit | Device in operation, top-of-ramp reached; on M(X)R the current rotating field direction is also indicated. |
| Flashing at 0.5 s interval | Off | Fault |

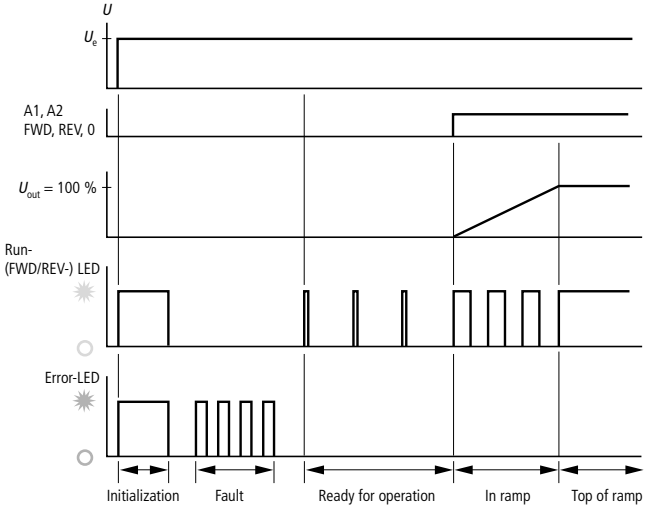

# Electronic motor starters and drives

## Soft starters DS4



### Power section versions

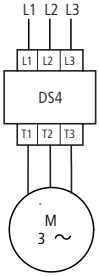


| DOL starters | DOL starters with bypass | Reversing starters | Reversing starters with bypass |
|---|---|---|---|
| DS4-340-...-M | DS4-340-...-MX | DS4-340-...-MR | DS4-340-...-MXR |
|  |  | 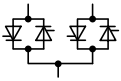 | 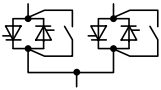 |
|  | |  | |
| | |  | |

# Electronic motor starters and drives

## Soft starters DM4



### Product attributes

- Configurable, communications-capable soft starter with plug-in control signal terminals and interface for optional units:
  - Operator control and programming unit
  - Serial interface
  - Fieldbus module
- Application selector switch with user-programmable parameter sets for 10 standard applications
- $I^2t$ controller
  - Current limitation
  - Overload protection
  - Idle/undercurrent detection (e.g. belt breakage)
- Kickstarting and heavy starting
- Automatic control voltage detection
- 3 relays, e.g. fault signal, TOR (top of ramp)

Ten default parameter sets for typical applications can be simply called up with a selector switch.

Additional plant-specific settings can be defined with an optional keypad.

In three-phase regulator control mode, for example, three-phase resistive and inductive loads – heaters, lighting systems, transformers – can be controlled with the DM4. Both open-loop and – with measured value feedback – closed-loop control are possible.

Instead of the keypad, intelligent interfaces can also be used:

- Serial RS 232/RS 485 interface (configuration through PC software)
- Suconet K fieldbus module (interface on every Moeller PLC)
- PROFIBUS DP fieldbus module

The DM4 soft starters provide the most convenient method of implementing soft starting. Because – in addition to phase failure and motor current monitoring – the motor winding temperature is signalled through the built-in thermistor input, the soft starters eliminate the need for additional, external components, such as motor protective relays. DM4 conforms to the IEC/EN 60947-4-2 standard.

With the soft starter, reducing the voltage results in a reduction of the high starting currents of the three-phase motor, although the torque is also reduced [$I_{startup} \sim U$] and [$M \sim U^2$]. After starting, the motor reaches its rated speed with all of the solutions described above. For starting motors at rated-load torque and/or for motor operation at a motor speed that is independent of the supply frequency, a frequency inverter is required.

# Electronic motor starters and drives

## Soft starters DM4



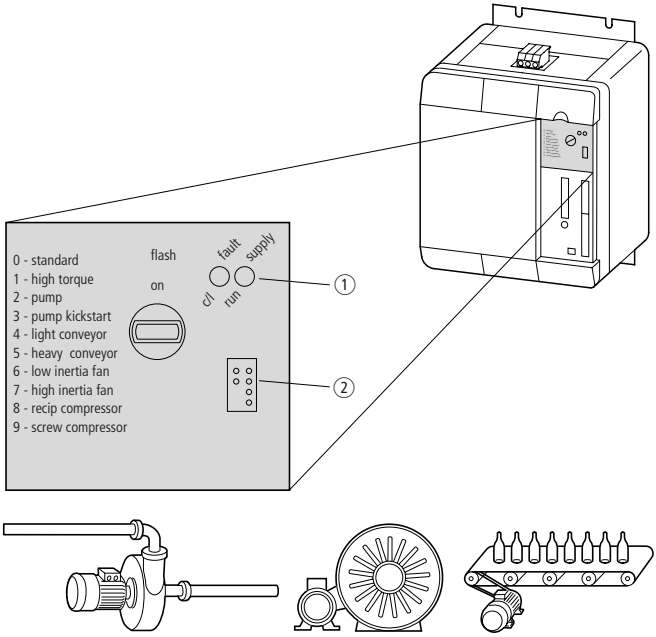

# Electronic motor starters and drives
## Soft starters DM4



### Standard applications (selector switch)

| Labelling on device | Indication on keypad | Meaning | Notes |
|---|---|---|---|
| Standard | Standard | Standard | Default settings, suitable without adaptation for most applications |
| High torque[1)] | High Torque | High breakaway torque | Drives with higher friction torque at standstill |
| Pump | Pump | Small pump | Pump drives up to 15 kW |
| Pump Kickstart | Pump.w.Kick | Large pump | Pump drives over 15 kW Longer deceleration times. |
| Light conveyor | LightConvey | Light conveyor | |
| Heavy conveyor | HeavyConvey | Heavy-duty conveyor | |
| Low inertia fan | LowInert.fan | Low-inertia fan | Fan drive with relatively small mass inertia moment of up to 15 times the motor's inertia moment |
| High inertia fan | HighInertfan | High-inertia fan | Fan drive with relatively large mass inertia moment of over 15 times the motor's inertia moment Longer ramp-up times. |
| Recip compressor | RecipCompres | Reciprocal compressor | Higher start pedestal, p.f. optimization matched |
| Screw compressor | ScrewCompres | Screw compressor | Increased current consumption, no current limitation |

1) For the "High Torque" setting, the soft starter must be able to supply 1.5 times the motor's rated current.

**Delta circuit**

Normally, soft starters are connected directly in series (in-line) with the motor. The DM4 soft starters also allow a delta connection.

Advantage:

- This is a less expensive alternative since the soft starter has to deliver only 58 % of the motor's rated current.

Disadvantages over in-line connection:

- As in a star-delta circuit, the motor must be connected with six conductors.
- The DM4's overload protection is active only in one phase, so that additional motor protection must be fitted in the parallel phase or in the supply cable.

**Note:**

The delta connection is more cost-effective at motor ratings over 30 kW and when replacing star-delta switches.

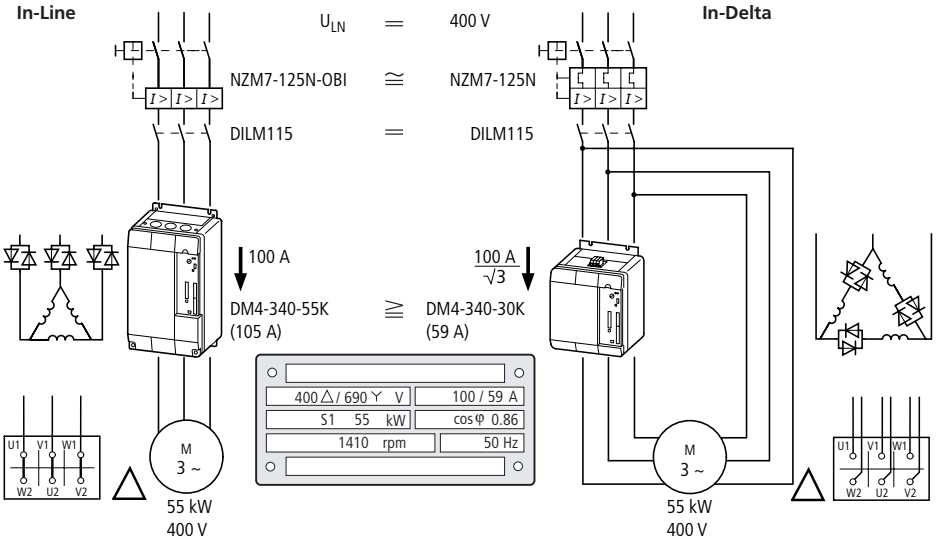

# Electronic motor starters and drives

## Frequency inverters DF5, DV5, DF6, DV6



### Design and mode of operation

Frequency inverters provide variable, stepless speed control of three-phase motors.

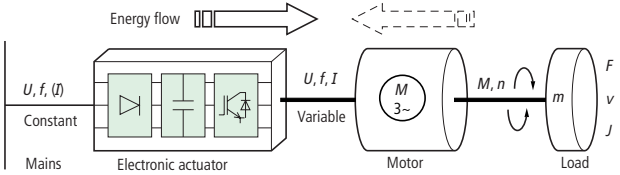


$P_{el} = U \times I \times \sqrt{3} \times \cos\varphi$

$I \sim M$
$f \sim n$

$P_L = \frac{M \times n}{9550}$

Frequency inverters convert constant mains voltage and frequency into a DC voltage, from which they generate a new three-phase supply with variable voltage and frequency for the three-phase motor. The frequency inverter draws almost only active power (p.f. ~ 1) from the supplying mains. The reactive power needed for motor operation is supplied by the DC link. This eliminates the need for p.f. correction on the mains side.

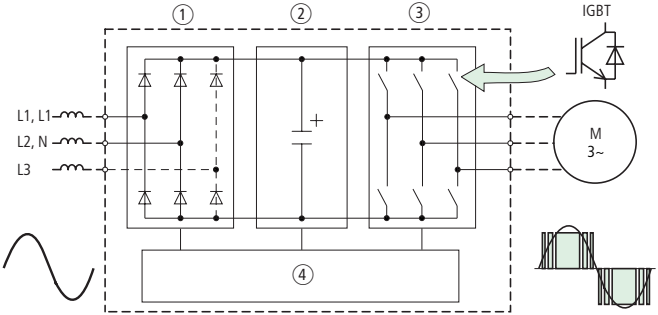


① Rectifier
② DC link
③ Inverter with IGBT
④ Open-/closed-loop control

# Electronic motor starters and drives

## Frequency inverters DF5, DV5, DF6, DV6



The frequency-controlled three-phase motor is today a standard component for infinitely variable speed and torque regulation, providing efficient, energy-saving power either as an individual drive or as part of an automated installation.

The possibilities for individual or plant-specific coordination are determined by the specific features of the inverters and by the modulation procedure used.

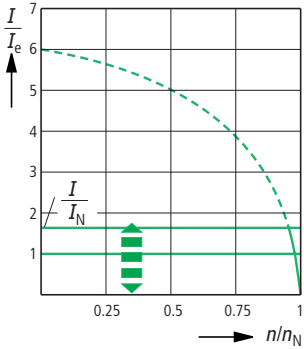


$I/I_e$: 0...1.8

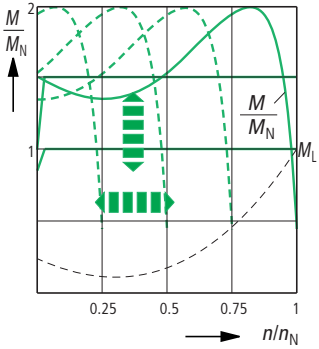


$M/M_N$: 0.1...1.5

### Modulation procedure of inverters

An inverter basically consists of six electronic switches and is today usually made with IGBTs (**i**nsulated **g**ate **b**ipolar **t**ransistors). The control circuit switches the IGBTs on and off according to various principles (modulation procedures) to change the frequency inverter's output frequency.

### Sensorless vector control

The switching patterns for the inverter are calculated with the PWM (**p**ulse-**w**idth **m**odulation) switching patterns. In voltage vector control mode, the amplitude and frequency of the voltage vector are controlled in dependence of slippage and load current. This allows large speed ranges and highly accurate speeds to be achieved without speed feedback. This control method (*U/f* control) is the preferred method for parallel operation of several motors with one frequency inverter.

In flow-regulated vector control, the active and reactive current components are calculated from the measured motor currents, compared with the values from the motor model and, if necessary, corrected. The amplitude, frequency and inclination of the voltage vector are controlled directly. This allows operation at the current limit and the achievement of large speed ranges and highly accurate speeds. Especially noteworthy is the drive's dynamic output at low speeds, for example in lifting and winding applications.

# Electronic motor starters and drives

## Frequency inverters DF5, DV5, DF6, DV6



The key advantage of sensorless vector technology is that the motor current can be regulated to match the motor's rated current. This allows dynamic torque regulation to be implemented for three-phase asynchronous motors.

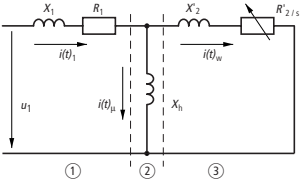


① Stator
② Air gap
③ Rotor
④ Rotor flow-oriented
⑤ Stator-oriented

In sensorless vector control, the flux-generating current $i_\mu$ and the torque-generating current $i_w$ are calculated from the measured stator voltage $u_1$ and stator current $i_1$. The calculation is performed with a dynamic motor model (electrical equivalent circuit of the three-phase motor) with adaptive current regulators, taking into account the saturation of the main field and the iron loss. The two current components are set according to their value and phase in a rotating coordinate system (ω) to the stator reference system (α, β).

The following illustration shows a simplified equivalent circuit diagram for the asynchronous motor and associated current vectors:

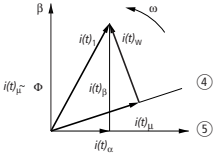


$i_1$ = Stator current (phase current)
$i_\mu$ = Flux-generating current component
$i_w$ = Torque-generating current component
$R'_2$ /s = Slip-dependent rotor resistance

The physical motor data required for the model is formed from the entered and measured (self-tuning) parameters.

# Electronic motor starters and drives

## Frequency inverters DF5, DV5, DF6, DV6

### Characteristics of frequency inverters DF5, DF6

- Infinitely variable speed control through voltage/frequency control (*U*/*f*)
- High starting and acceleration torque
- Constant torque in motor's rated range
- EMC measures (optional: radio interference filter, screened motor cable)

**Additional features of sensorless vector control for frequency inverters DV5 and DV6**

- Infinitely variable torque control, also at zero speed
- Low torque control time
- Increased concentricity and constancy of speed
- Speed control (options for DV6: control module, pulse generator)

The DF5, DF6, DV5 and DV6 frequency inverters are factory-preset for their assigned motor rating, allowing drives to be started immediately after installation.

Individual settings can be made with an optional keypad. Various control modes can be selected and configured in a number of layers,

For applications with pressure and flow control, all devices contain a built-in PID controller that can be matched to any system.

A further advantage of the frequency inverters is that they eliminate the need for external components for monitoring and motor protection. On the mains side, only a fuse or circuit-breaker (PHKZ) is needed for line and short-circuit protection. The frequency inverter's inputs and outputs are monitored internally by measurement and control circuits, such as overtemperature, earth fault, short-circuit, motor overload, motor blockage and drive belt monitoring. Temperature measurement in the motor winding can also be incorporated in the frequency inverter's control circuit through a thermistor input.

# Electronic motor starters and drives

## Frequency inverters DF5, DV5, DF6, DV6



### Frequency inverter, installing

Electronic devices such as soft starters and frequency inverters must normally be fitted vertically.

To ensure adequate air circulation for cooling, a clear space of at least 100 mm should be maintained both above and below the device. At the sides of the device, the clear space should be at least 10 mm for DF5 and DV5 and 50 mm for DF6 and DV6.

Note that the front enclosure elements of the DF5 and DV5 devices open to the side for electrical connection. Make sure that the free space in the area of the front hinged covers is at least 80 mm to the left side and at least 120 mm to the right side.

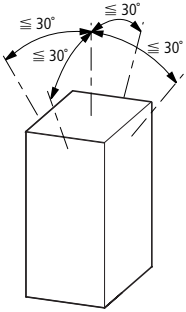


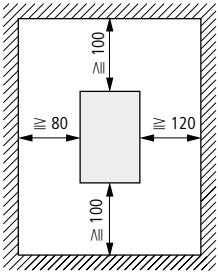

# Electronic motor starters and drives

## Frequency inverters DF5, DV5, DF6, DV6



### EMC-compliant connection of frequency inverters

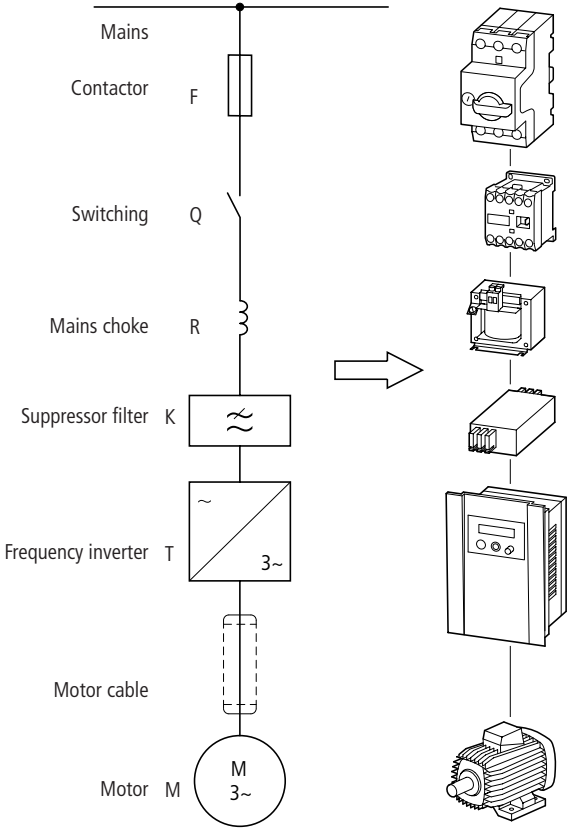


The EMC-compliant mounting and connection is described in detail in the respective devices' manuals (AWB).

# Electronic motor starters and drives

## Frequency inverters DF5, DV5, DF6, DV6



### Notes about correct installation of frequency inverters

For an EMC-compliant installation, observe the following information. Electrical and magnetic disturbance fields can be limited to the required levels. The necessary measures work only in combination and should be taken into consideration at the engineering stage. To subsequently modify an installation to meet EMC requirements is possible only at considerable additional cost.

### EMC measures

The EMC (**e**lectro**m**agnetic **c**ompatibility) of a device is its ability to withstand electrical interference (i.e. its immunity) while itself not emitting excessive electromagnetic interference into the environment.

The IEC/EN 61800-3 standard describes the limit values and test methods for emitted interference and noise immunity for variable-speed electrical drives (PDS = Power Drives System).

The tests and values are based not on individual components but on a typical complete drive system.

Measures for EMC-compliant installation are:

- Earthing measures
- Screening measures
- Filtering measures
- Chokes

They are described in more detail below.

**Earthing measures**

These must be implemented to comply with the legal standards and are a prerequisite for the effective use of further measures such as filters and screening. All conducting metallic enclosure sections must be electrically connected to the earth potential. For EMC, the important factor is not the cable's cross-section, but its surface, since this is where high frequency current flows to earth. All earthing points must be low-impedance, highly conductive and routed directly to the central earthing point (potential equalization bar or star earth). The contact points must be free from paint and rust. Use galvanized mounting plates and materials.

K1 = Radio interference filter
T1 = Frequency inverter

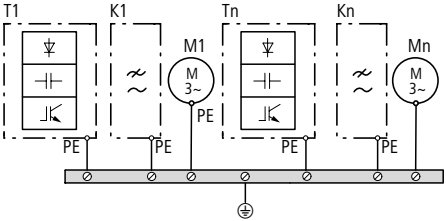

# Electronic motor starters and drives

Frequency inverters DF5, DV5, DF6, DV6



## Screening measures

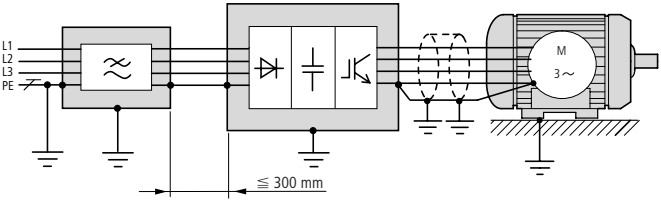


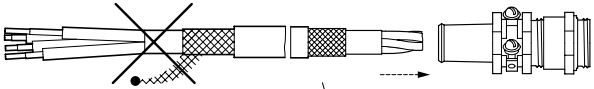

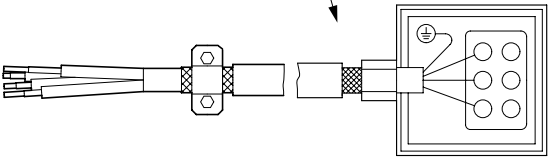

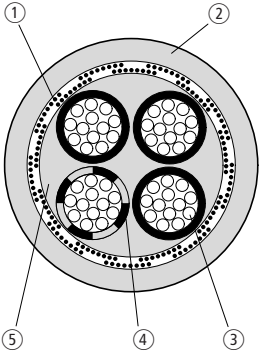


Four-core screened motor supply cable:

1. Copper screen braid, earth at both ends with large-area connections
2. PVC outer sheath
3. Drain wire (copper, U, V, W, PE)
4. PVC cable insulation 3 × black, 1 × green/yellow
5. Textile and PVC fillers

# Electronic motor starters and drives

## Frequency inverters DF5, DV5, DF6, DV6



Screening reduces emitted interference (noise immunity of neighbouring systems and devices against external influences). Cables laid between the frequency inverter and the motor must be screened, but the screen must not be considered a replacement for the PE cable. Four-wire motor cables are recommended (three phases plus PE). The screen must be connected to earth (PES) at both ends with a large-area connection. Do not connect the screen with pigtails. Interruptions in the screen, such as terminals, contactors, chokes, etc., must have a low impedance and be bridged with a large contact area.

To do this, sever the screen near the module and establish a large-area contact with earth potential (PES, screen terminal). Free, unscreened cables should not be longer than about 100 mm.

Example: Screen attachment for maintenance switch

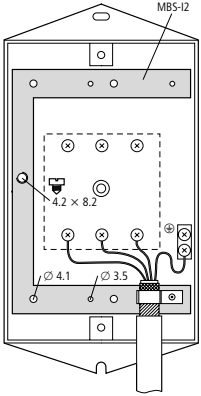


**Note:**
Maintenance switches at of frequency inverter outputs must be operated only at zero current.

Control and signal lines must be twisted and may be double-screened, the inner screen being connected to the voltage source at one end and the outer screen at both ends. The motor cable must be laid separately from the control and signal lines (>10 cm) and must not run parallel to any power cables.

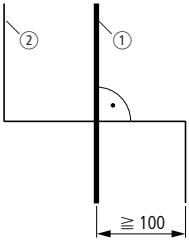


① Power cables: mains, motor, internal DC link, braking resistance
② Signal cables: analog and digital control signals

Inside control panels, too, cables should be screened if they are more than 30 cm long.

# Electronic motor starters and drives

## Frequency inverters DF5, DV5, DF6, DV6



Example for screening control and signal cables:

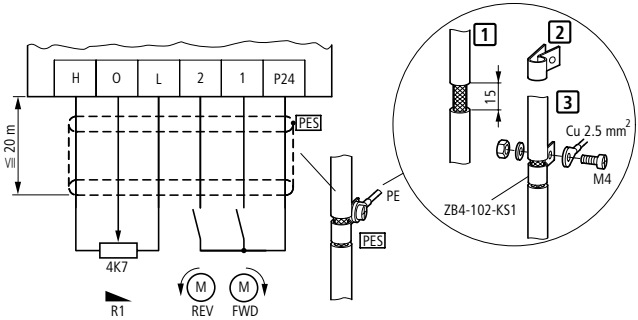


Example for a standard connection of frequency inverter DF5, with reference value potentiometer R1 (M22-4K7) and mounting accessories ZB4-102-KS1

**Filtering measures**

Radio interference filters and line filters (combinations of radio interference filter and mains choke) protect against conducted high-frequency interference (noise immunity) and reduce the frequency inverter's high-frequency interference, which is transmitted through or emitted from the mains cable, and which must be limited to a prescribed level (emitted interference).

Filters should be installed as closely as possible to the frequency inverter to keep the length of the connecting cable between frequency inverter and filter short.

**Note:**

The mounting surfaces of frequency inverters and radio interference filters must be free from paint and must have good HF conductivity.

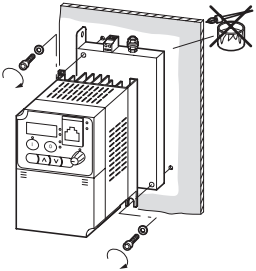

# Electronic motor starters and drives

## Frequency inverters DF5, DV5, DF6, DV6



Filters produce leakage currents which, in the event of a fault (such as phase failure or load unbalance), can be much larger than the rated values. To prevent dangerous voltages, the filters must be earthed. As the leakage currents are high-frequency interference sources, the earthing connections and cables must have a low resistance and large contact surfaces.

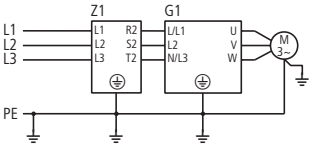


For leakage currents above 3.5 mA, one of the following must be fulfilled according to EN 60335:

- the protective conductor must have a cross-section greater than 10 $mm^2$,
- the protective conductor must be open-circuit monitored, or
- an additional conductor must be fitted.

**Chokes**

Fitted on the frequency inverter's input side, chokes reduce the current-dependent phase effect and improve the power factor. This reduces the current harmonics and improves the mains quality. The use of mains chokes is especially recommended where several frequency inverters are connected to a single mains supply point when other electronic devices are also connected to the same supply network.

A reduction of the mains current interference is also achieved by installing DC chokes in the frequency inverter's DC link.

At the frequency inverter's output, chokes are used if the motor cables are long and if multiple motors are connected in parallel to the output. They also enhance the protection of the power semiconductors in the event of an earth fault or short-circuit, and protect the motors from excessive rates of voltage rise (> 500 V/µs) resulting from high pulse frequencies.

# Electronic motor starters and drives

Frequency inverters DF5, DV5, DF6, DV6



**Example: EMC-compliant mounting and connection**

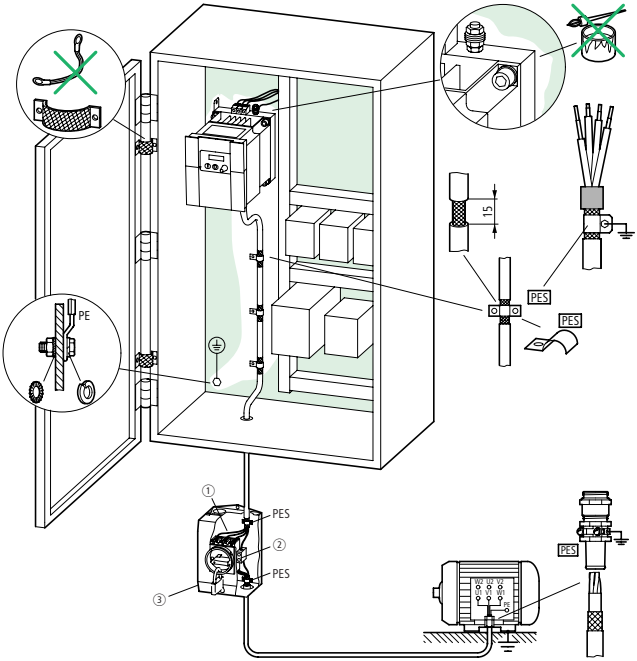


① Metal plate, e.g. MSB-I2
② Earthing terminal
③ Maintenance switches

# Electronic motor starters and drives

## Connection examples, DS4



### Linking the overload relay into the control system

We recommend using an external overload relay instead of a motor-protective circuit-breaker with built-in overload relay. This allows controlled ramping down of the soft starter through the control section in the event of an overload.

**Note:**
Connecting the motor directly to mains power can cause overvoltage and destruction of the soft starter's semiconductors.

**Note:**
The overload relay's signalling contacts are linked into the On/Off circuit.

In the event of a fault, the soft starter decelerates for the set ramp time and stops.

### Standard connection, unidirectional rotation

In standard operation the soft starter is connected into the motor supply line. A central switching element (contactor or main switch) with isolating properties to isolate the mains according to EN 60947-1 section 7.1.6 and for working on the motor is required according to EN 60204-1 section 5.3. No contactors are required to operate individual motor feeders.

**Minimum connection of DS4-340-M(X)**

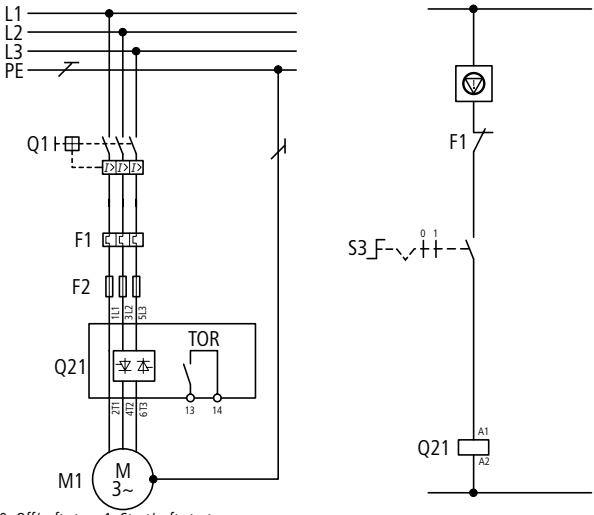


0: Off/soft stop, 1: Start/soft start

## Connection of DS4-340-M as semiconductor contactor

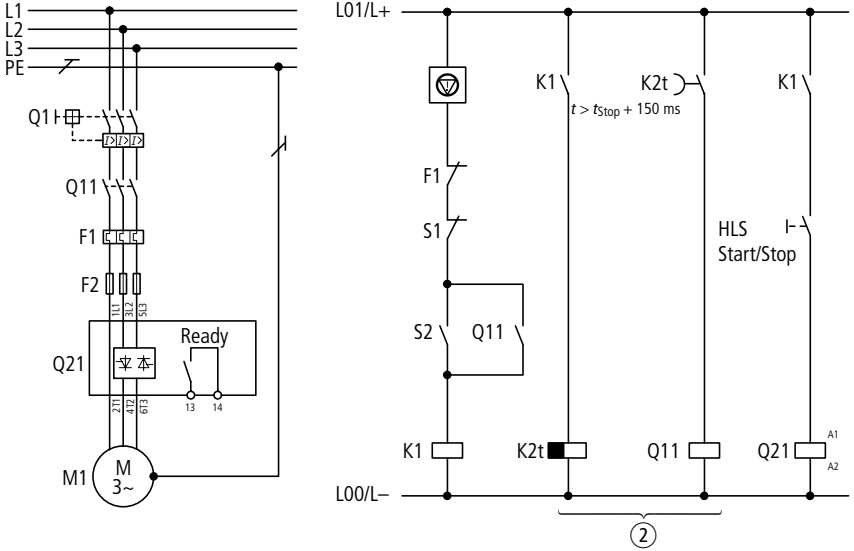


Q1 = Line protection
Q11 =Mains contactor (optional)
F1 = Motor-protective relay

F2 = Semiconductor fuse for type "2" coordination, in addition to Q1
Q21 = Semiconductor contactor
M1 = Motor

S1: Q11 Off
S2: Q11 On
②: Control with Q11/K2t optional
HLS = Semiconductor contactor On/Off

# Electronic motor starters and drives

Connection examples, DS4



## Connection as soft starter without separate mains contactor

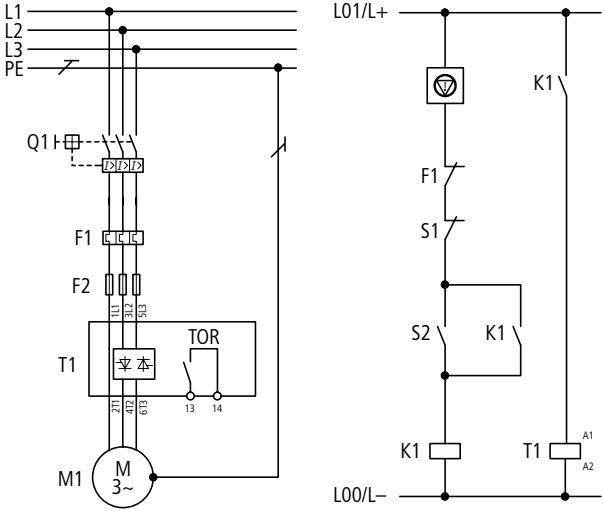


Q1: Line protection
F1: Overload relay
F2: Semiconductor fuse for type "2" coordination, in addition to Q1
T1: Semiconductor contactor
M1: Motor

Emergency-Stop
S1: Soft stop
S2: Soft start

## Connection of soft starter with mains contactor

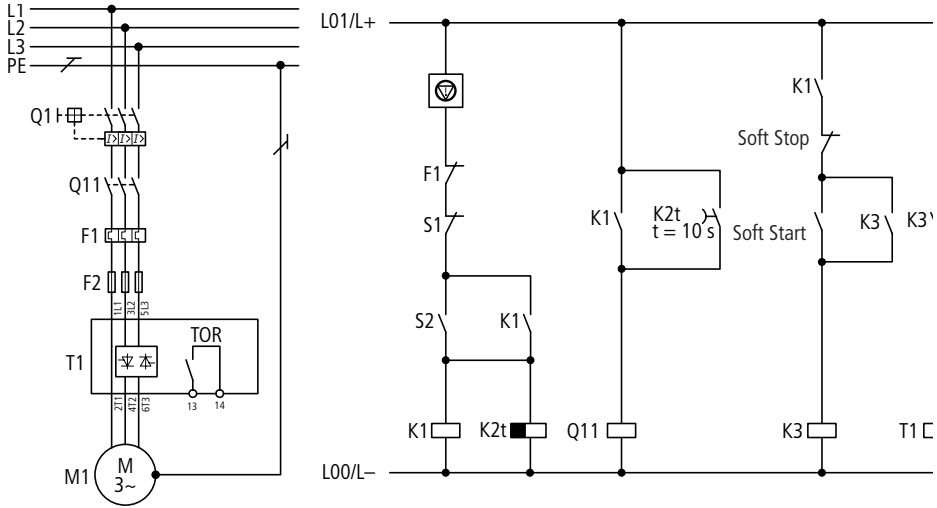


Q1 = Line protection
Q11 = Mains contactor (optional)
F1 = Motor-protective relay

F2 = Semiconductor fuse for type "2" coordination, in addition to Q1
T1 = Soft starter
M1 = Motor

Emergency-Stop
S1: Q11 Off
S2: Q11 On

# Electronic motor starters and drives

## Connection examples, DS4



### Reversing circuit standard connection, bidirectional rotation

**Note:**

The device of the DS4-...-M(X)R series have a built-in electronic reversing contactor function. You need to only specify the required direction of rotation. The DS4 then internally ensures the correct control sequence.

At ratings over 22 kW, a conventional reversing circuit layout must be used, because above this rating the DS4 is not available with built-in reversing contactor function. In this case make sure that direction reversal takes place only with the DS4 in stop state. Use an external controller to implement this functionality. In soft starter operation, you can use a TOR relay to control an off-delayed relay for this purpose, whereby the deceleration time must be t-Stop + 150 ms or higher.

**Minimum connection of DS4-340-M(X)R**

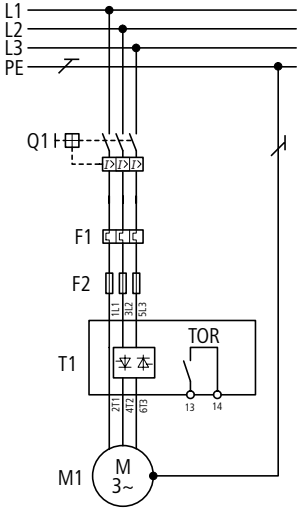


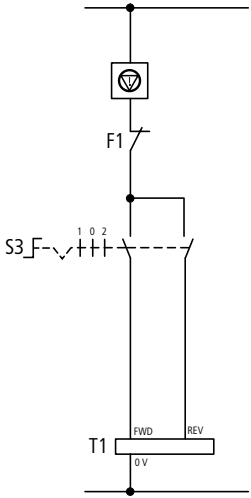


Q1: Line protection
Q11: Mains contactor (optional)
F1: Overload relay
F2: Semiconductor fuse for type "2" coordination, in addition to Q1

T1: Soft starter
M1: Motor
Ⓥ: Emergency-Stop
0: Off/Soft stop
1: FWD
2: REV

## Connection of reversing soft starter without mains contactor

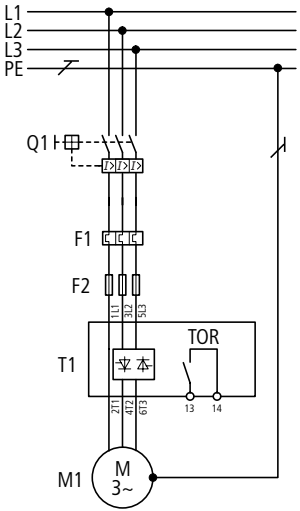


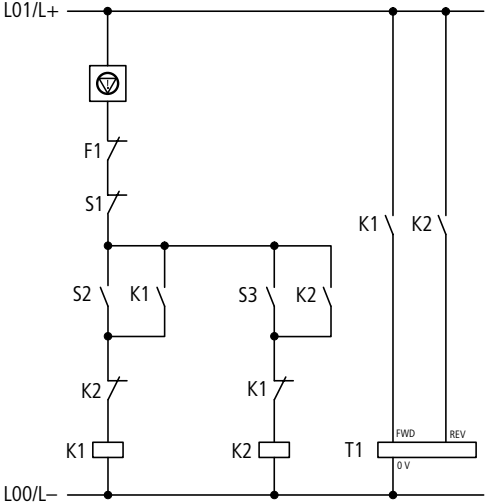


Q1: Line protection
F1: Overload relay
F2: Semiconductor fuse for type "2" coordination, in addition to Q1

T1: Semiconductor contactor
M1: Motor

Ⓥ: Emergency-Stop
S1: Soft stop
S2: Soft start FWD
S2: Soft start REV

# Electronic motor starters and drives

Connection examples, DS4



## Connection of reversing soft starter with mains contactor

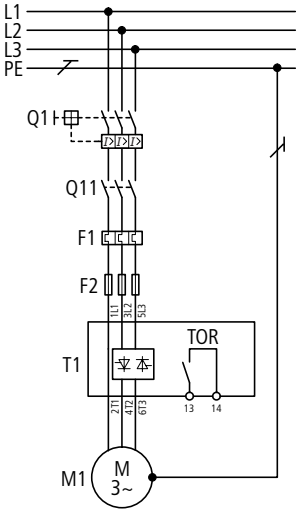


Q1: Line protection
Q11: Mains contactor (optional)
F1: Overload relay
F2: Semiconductor fuse for type "2" coordination, in addition to Q1
T1: Semiconductor contactor
M1: Motor

# Electronic motor starters and drives

## Connection examples, DS4

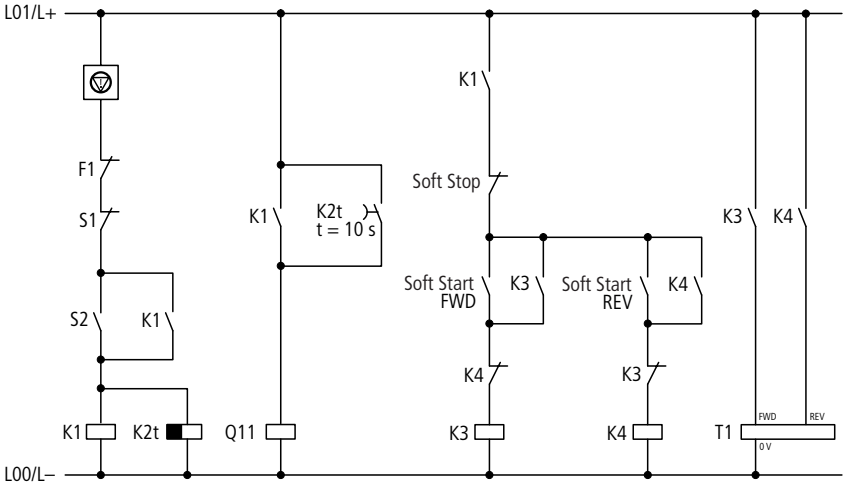


: Emergency-Stop
S1: Q11 Off
S2: Q11 On

# Electronic motor starters and drives

## Connection examples, DS4



### Bypass connection, single direction of rotation

**Caution!**

The DS4-...-MX(R) devices have built-in bypass contacts. The examples below therefore apply only for DS4-...-M. If an external bypass for devices with reversing function (DS4-...-MR) is to be fitted, you must include an additional bypass contactor is required the second direction of rotation as well as additional interlocks to prevent a short-circuit through the bypass contactors.

The bypass connection allows a direct connection of the motor to the mains to suppress heat dissipation through the soft starter. The bypass contactor is actuated once the soft starter has completed the acceleration phase (i.e. once mains voltage is reached). By default, the Top-of-Ramp function is mapped to relay 13/14. The soft starter controls the bypass contactor so that no further user action is required. Because the bypass contactor is switched only at zero current and does not, therefore, have to switch the motor load, an AC1 layout can be used. Suitable bypass contactors are listed in appendix "Technical data".

If an Emergency-Stop requires an immediate disconnection of the voltage, the bypass may have to switch under AC3 conditions (for example if the Enable signal is removed with a command or the soft stop ramp time is 0). In this case, the circuit must be laid out so that either a higher-priority isolating element trips first or the bypass must be laid out to AC3.

# Electronic motor starters and drives

## Connection examples, DS4



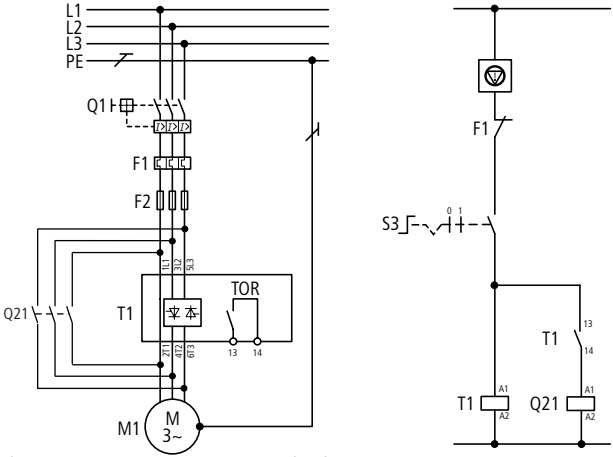


S3 = Soft start/stop
Q1 = Line protection
Q21 = Bypass contactor
F1 = Overload relay
F2 = Semiconductor fuse for type "2" coordination, in addition to Q1
T1 = Semiconductor contactor
M1 = Motor

# Electronic motor starters and drives

## Connection examples, DS4



### Pump connection, single direction of rotation

In pump applications the bypass contactor is often required to provide emergency operation capability. This is achieved with a service switch that allows a changeover from soft starter operation to DOL starting through the bypass contactor. In the latter setting the soft starter is fully bypassed. But because the output circuit must not be opened during operation, the interlocks ensure that changeovers take place only after a stop.

**Note:**
In contrast to simple bypass operation, the bypass contactor must be laid out to AC3 here. For a suitable contactor, see our recommended mains contactor in appendix "Technical data".

**Pump**

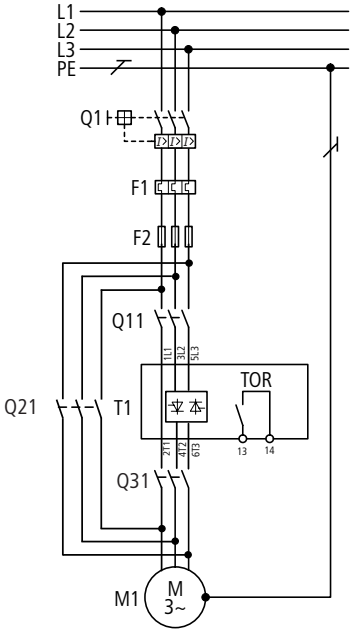


Q1: Line protection
Q11: Mains contactor (optional)
Q21: Bypass contactor
Q31: Contactor
F1: Overload relay
F2: Semiconductor fuse for type "2" coordination, in addition to Q1
T1: Semiconductor contactor
M1: Motor

**Pump control**

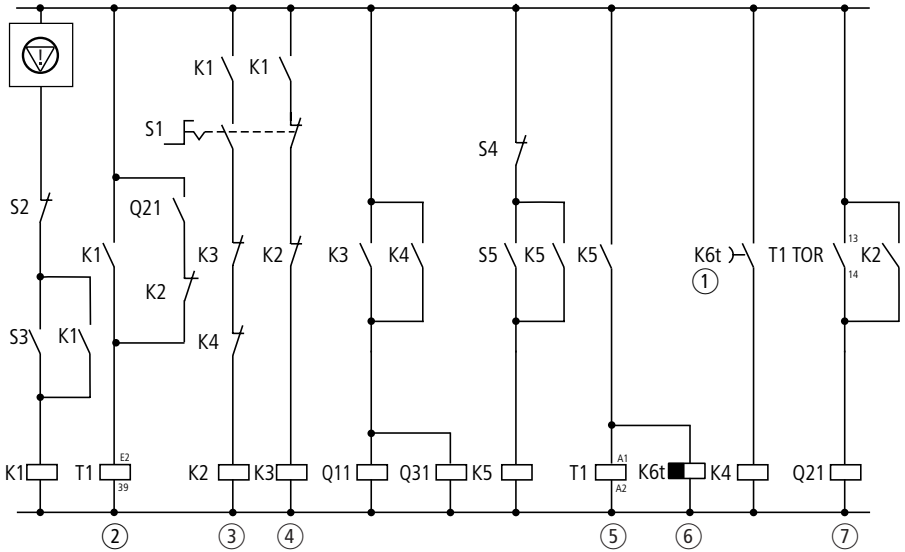


- Emergency-Stop
- 1 t > t-Stop + 150 ms
- 2 Enable
- 3 Hand
- 4 Auto
- 5 Soft start/soft stop
- 6 RUN
- 7 Bypass

# Electronic motor starters and drives

## Connection examples, DS4



### Starting several motors sequentially with a soft starter (cascaded control)

When starting several motors one after the other using a soft starter, keep to the following changeover sequence:

- Start using soft starter
- Switch on bypass contactor
- Disable soft starter
- Switch soft starter output to the next motor
- Restart

→ page 2-52

Ⓥ Emergency-Stop
S1: Q11 Off
S2: Q11 On
① Soft start/soft stop

② Simulation of RUN relay
Timing relay K2T simulates the RUN signal of the DS4. The set off-delay time must be greater than the ramp time. To be on the safe side, use 15 s.

③ RUN

④ Off-time monitoring
Set the timing relay K1T so that the soft starter is not thermally overloaded: calculate the time from the soft starter's permissible operating frequency or select a soft starter that allows the required time to be reached.

⑤ Changeover monitoring
Set the timing relay to a return time of about 2 s. This ensures that the next motor branch can not be connected as long as the soft starter is running.

→ page 2-53

⑨ Switching off individual motors
The Off switch results in all motors being switched off at the same time. To switch off individual motors, you need to make use of N/C contact ⑨.

Observe the thermal load on the soft starter (starting frequency, current load). If motors are to be started at short intervals, you may have to select a soft starter with a higher load cycle.

**Soft starters with motor cascade**

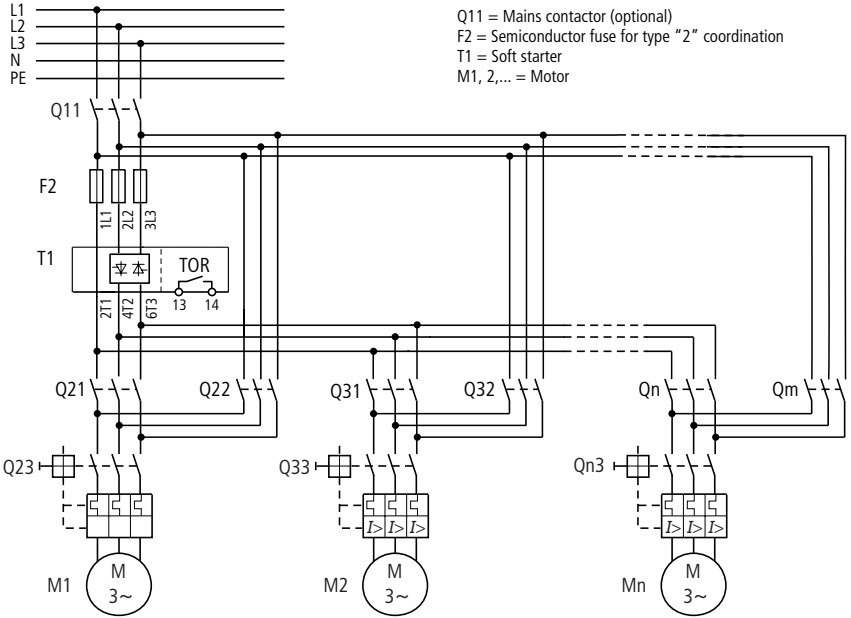

## Soft starter with motor cascade, control section part 1

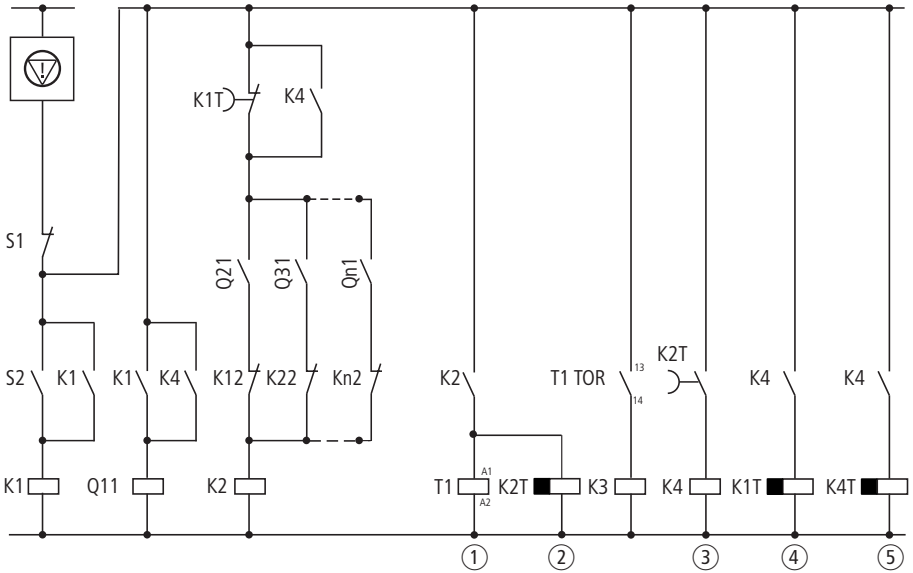

**Soft starter with motor cascade, control section part 2**

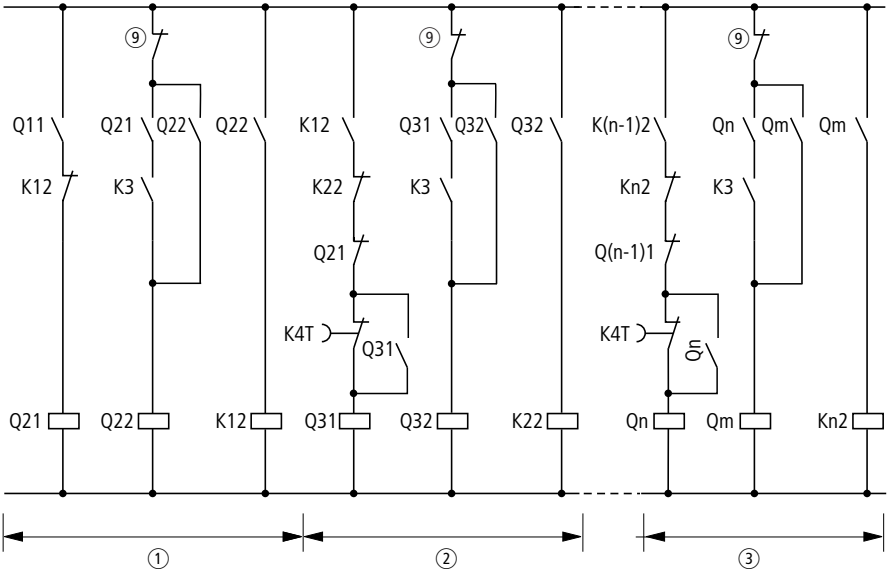


① Motor 1
② Motor 2
③ Motor n
⑨ → section "⑨ Switching off individual motors", page 2-50

# Electronic motor starters and drives

## Connection examples, DM4



### Enable/immediate stop without ramp function (e.g. for Emergency-Stop)

The digital input E2 is programmed in the factory so that it has the "Enable" function. The soft starter is enabled only when a High signal is applied to the terminal. The soft starter cannot be operated without enabling signal.

In the event of wire breakage or interruption of the signal by an Emergency-Stop circuit, the regulator in the soft starter is immediately blocked and the power circuit disconnected, and after that the "Run" relay drops out.

Normally the drive is always stopped via a ramp function. When the operating conditions require an immediate de-energization, this is effected via the enabling signal.

**Caution!**

You must in all operating conditions always first stop the soft starter ("Run" relay scanning), before you mechanically interrupt the power conductors. Otherwise a flowing current is interrupted – thus resulting in voltage peaks, which in rare cases may destroy the thyristors of the soft starter.

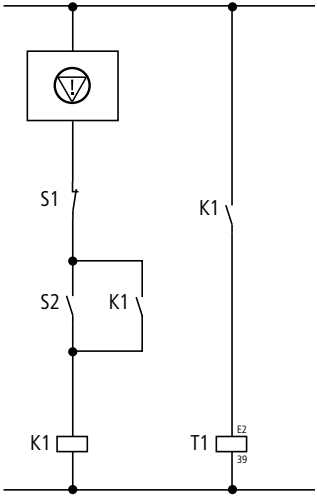


Ⓥ: Emergency-Stop
S1: Off
S2: On
T1: (E2 = 1 → enabled)

# Electronic motor starters and drives

## Connection examples, DM4



### Linking the overload relay into the control system

We recommend using an external overload relay instead of a motor-protective circuit-breaker with built-in overload relay. This allows controlled ramping down of the soft starter through the control section in the event of an overload.

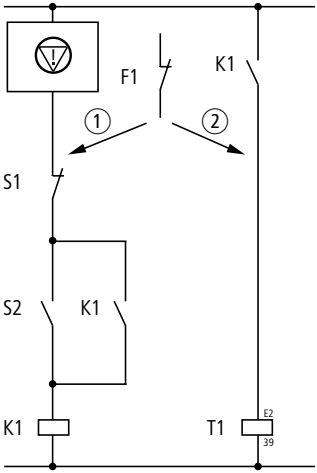


**Caution!**
Connecting the motor directly to mains power can cause overvoltage and destruction of the soft starter's semiconductors.
There are two options, which are shown in the following diagram:

Ⓥ: Emergency-Stop
S1: Off
S2: On
T1: Enable (E2 = 1 → enabled)

① The signalling contacts of the overload relay are linked into the On/Off circuit. In the event of a fault, the soft starter decelerates for the set ramp time and stops.

② The signalling contacts of the overload relay are linked into the enabling circuit. In the event of a fault, the soft starter's output is immediately de-energized. Although the soft starter shuts off its output, the mains contactor remains energized. To de-energize the mains contactor as well, include a second contact of the overload relay in the On/Off circuit.

# Electronic motor starters and drives

## Connection examples, DM4



### DM4 with overload relay

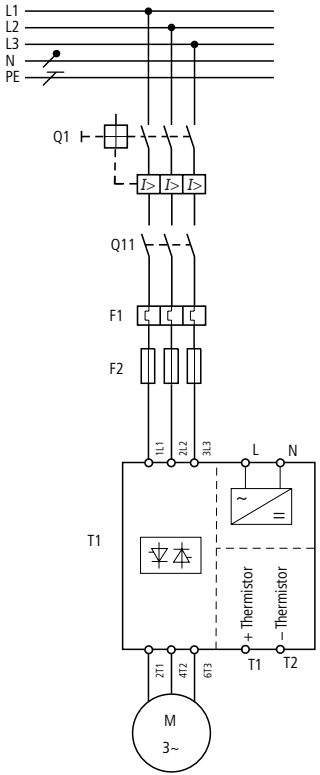


### Standard connection

For isolation from the mains, either a mains contactor upstream of the soft starter or a central switching device (contactor or main switch) is necessary.

### Control section

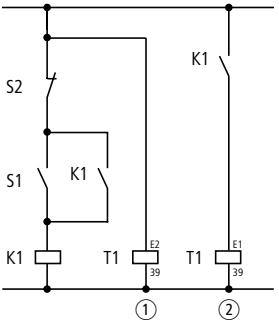


S1: Soft start
S2: Soft stop
① Enable
② Soft start/Soft stop

# Electronic motor starters and drives

## Connection examples, DM4



### DM4 without separate mains contactor

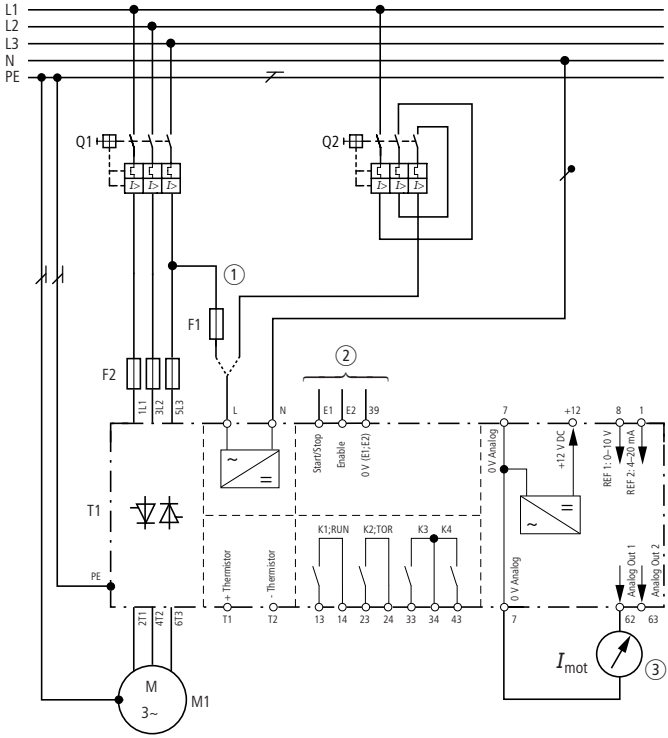


① Control voltage through Q1 or F1 or through Q2

② See control section

③ Motor current indication

# Electronic motor starters and drives

Connection examples, DM4



## DM 4-340 with separate mains contactor

### Control section

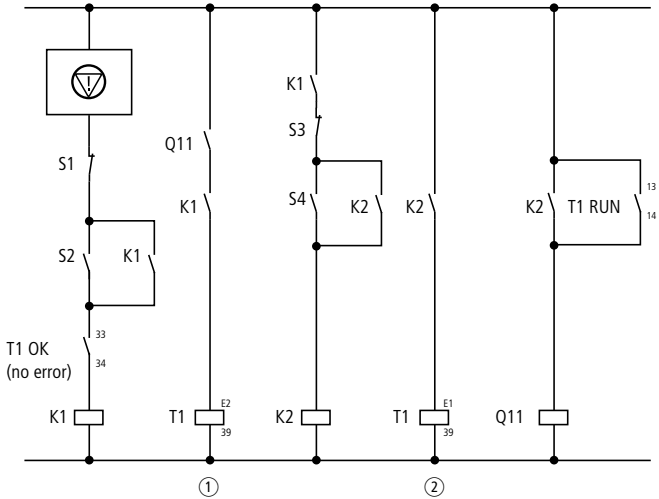


Emergency-Stop
S1: Off
S2: On
1 Enable
2 Soft start/Soft stop

# Electronic motor starters and drives

## Connection examples, DM4



### DM4-340 with separate mains contactor

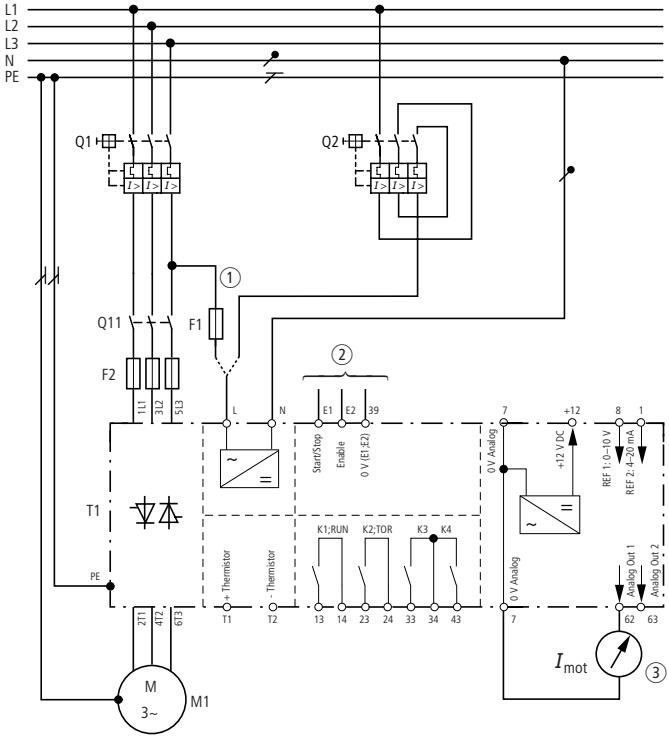


① Control voltage through Q1 or F1 or through Q2
② See Control section
③ Motor current indication

# Electronic motor starters and drives

## Connection examples, DM4



### Bypass connection

After the run-up (full mains voltage reached) the DM4 soft starter actuates the bypass contactor. Thus, the motor is directly connected with the mains.

Advantage:

- The soft starter's heat dissipation is reduced to the no-load dissipation.
- The limit values of radio interference class "B" are adhered to.

The bypass contactor is now switched to a no-load state and can therefore be AC-1 rated.

If an immediate de-energization is required in the event of an Emergency-Stop, then the bypass contactor must also switch the motor load. In this case it must be AC-3 rated.

### Control section

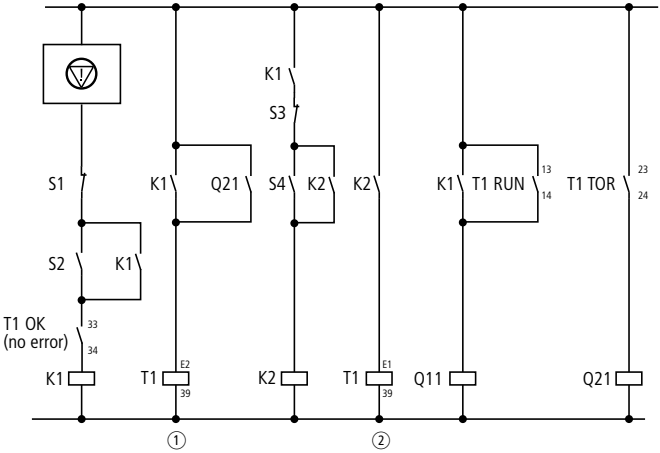


Emergency-Stop
S1: Off
S2: On
1 Enable
2 Soft start/Soft stop

# Electronic motor starters and drives

## Connection examples, DM4



### DM4-340 with bypass

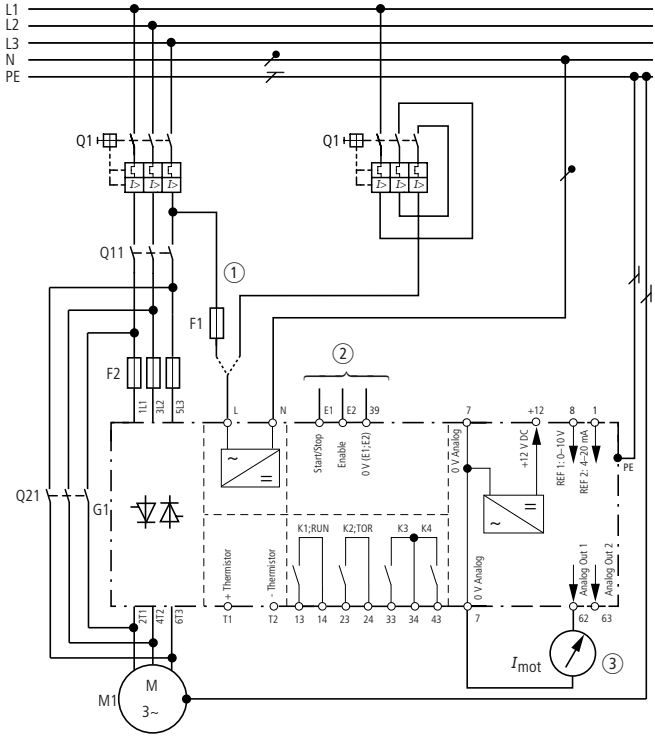


① Control voltage through Q1 or F1 or through Q2
② See Control section
③ Motor current indication

# Electronic motor starters and drives

## Connection examples, DM4



### Delta connection

A delta connection allows the use of a soft starter with a lower rating than the motor it is used to control. Connected in series with each motor winding, the current the soft starter needs to supply is reduced by a factor of √3. This layout has the drawback that six motor supply cables are needed. Apart from that there are no restrictions. All soft starter functions remain available.

For this you have to connect the motor in delta and the voltage in this connection method must agree with the mains voltage. For 400 V mains voltage the motor must therefore be marked with 400 V/690 V.

**Control section**

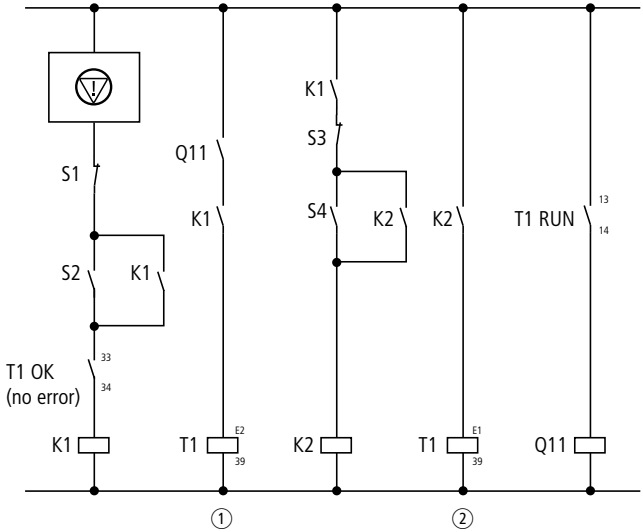


Emergency-Stop
S1: Off
S2: On
1 Enable
2 Soft start/Soft stop
E2: Enable
T1: +thermistor
T2: –thermistor

# Electronic motor starters and drives

## Connection examples, DM4



### DM4-340 Delta

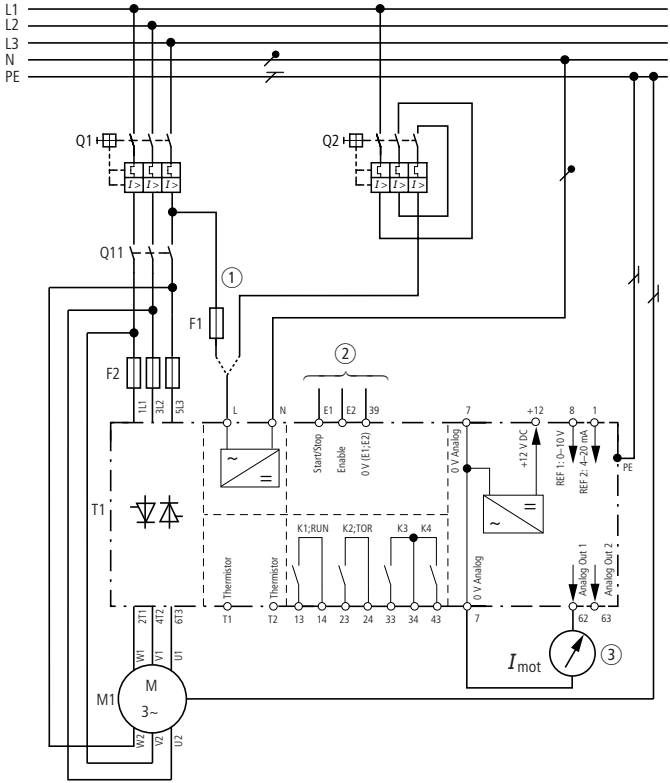


① Control voltage through Q1 or F1 or through Q2
② See Control section
③ Motor current indication

# Electronic motor starters and drives

## Connection examples, DM4



### Starting several motors sequentially with a soft starter

When starting several motors one after the other using a soft starter, keep to the following sequence when changing over:

- Start using soft starter
- Switch on bypass contactor
- Block soft starter
- Switch soft starter output to the next motor
- Restart

# Electronic motor starters and drives

## Connection examples, DM4



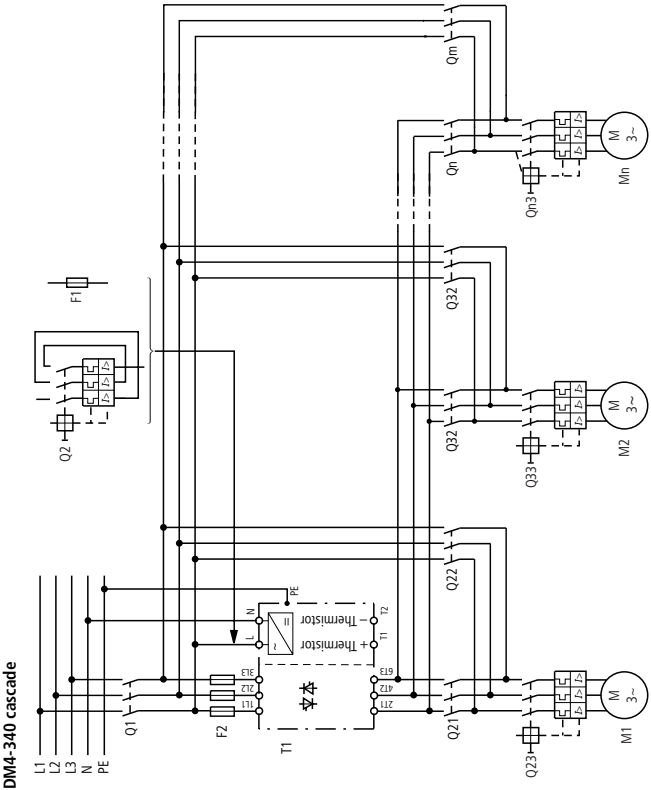

## Control section part 1

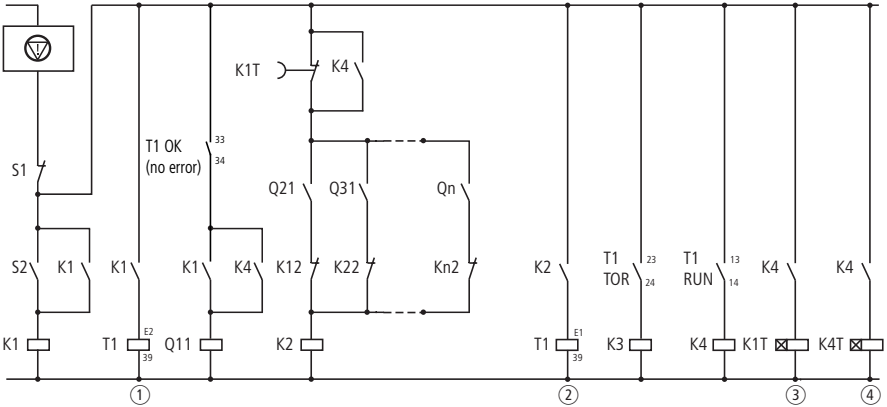

**DM4-340 cascade, control section part 2**

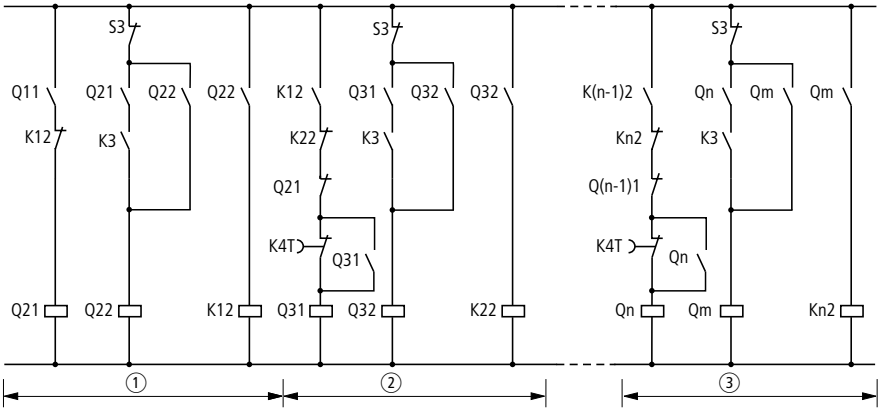


Ⓥ Emergency-Stop
S1: Off
S2: On
① Enable
② Soft start/Soft stop

③ Set the timing relay so that the soft starter is not thermally overloaded. The appropriate time relates to the admissible operating frequency of the selected soft starter. Alternatively, select the soft starter so that the required times can be attained.

④ Set the timing relay to a return time of about 2 s. This ensures that the next motor branch can not be connected as long as the soft starter is running. N/C contact S1 switches all motors off at the same time. To switch off motors individually, you need to make use of N/C contact S3.

# Notes

**Block diagram, DF5 and DV5**

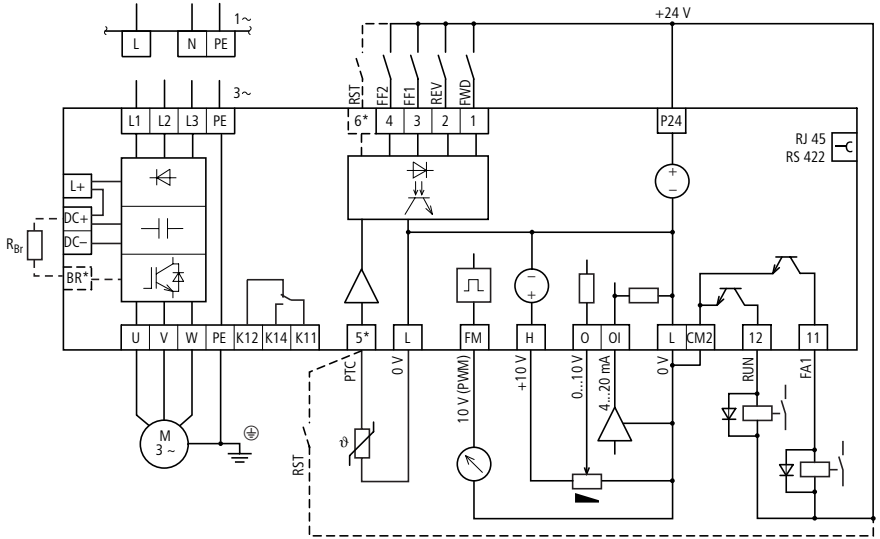


BR* DV5 only
6* DV5 only
5* Input RST for DF5

# Electronic motor starters and drives

## Connection examples, DF5 and DV5



### Basic control

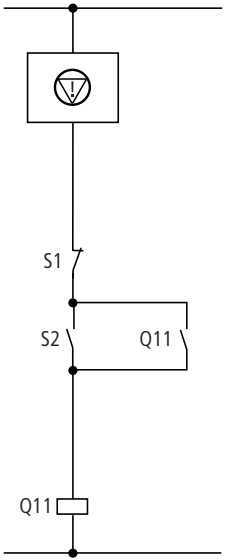


Example 1
Reference input through potentiometer R1
Enable (START/STOP) and direction control through terminals 1 and 2 with internal control voltage

Ⓣ: Emergency-Stop circuit
S1: Off
S2: On
Q11: Mains contactor
F1: Line protection
PES: Cable screen PE connection
M1: Motor, 3-phase 230 V

Note:
For EMC-conformant mains connection, suitable radio interference suppression measures must be implemented according to product standard IEC/EN 61800-3.

DILM12-XP1

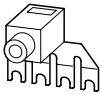

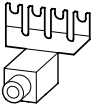

(4th pole can be broken off)

DILM

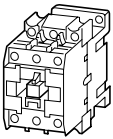

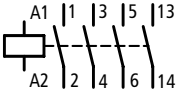

# Electronic motor starters and drives

## Connection examples, DF5 and DV5



### Wiring

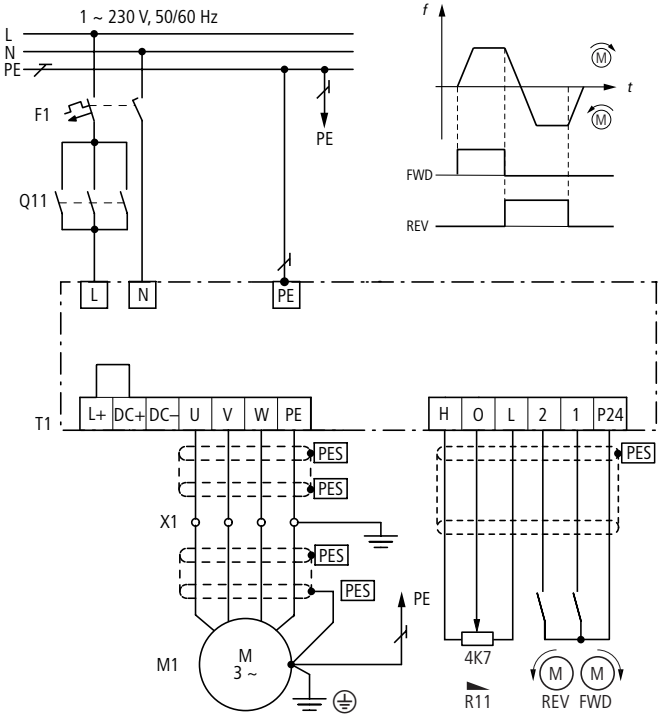


– Single-phase frequency inverter DF5-322-...
– Directional control through terminals 1 and 2
– External reference input from potentiometer R1

FWD: Clockwise rotating field enable
REV: Anticlockwise rotating field enable

# Electronic motor starters and drives

## Connection examples, DF5 and DV5



### DF5-340-... frequency inverters with EMC-conformant connection

**Control section**

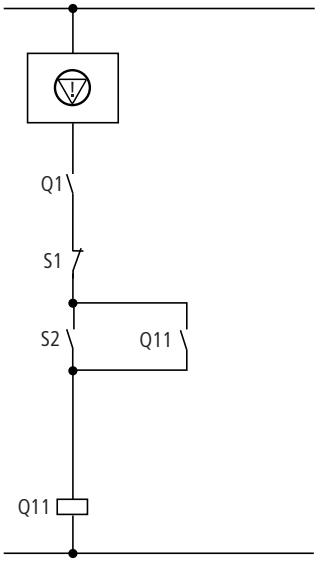


Example 2
Reference input through potentiometer R11 ($f_s$) and fixed frequency ($f_1$, $f_2$, $f_3$) through terminal 3 and 4 with internal control voltage
Enable (START/STOP) and rotating field selection through terminal 1

Ⓥ: Emergency-Stop circuit
S1: Off
S2: On
Q11: Mains contactor
R1: Line reactor
K1: RFI filter
Q1: Line protection
PES: Cable screen PE connection
M1:Motor, 3-phase 400 V

FWD: Clockwise rotating field enable, reference frequency $f_S$
FF1: Fixed frequency $f_1$
FF2: Fixed frequency $f_2$
FF1+FF2: Fixed frequency $f_3$

# Electronic motor starters and drives

## Connection examples, DF5 and DV5



### Wiring

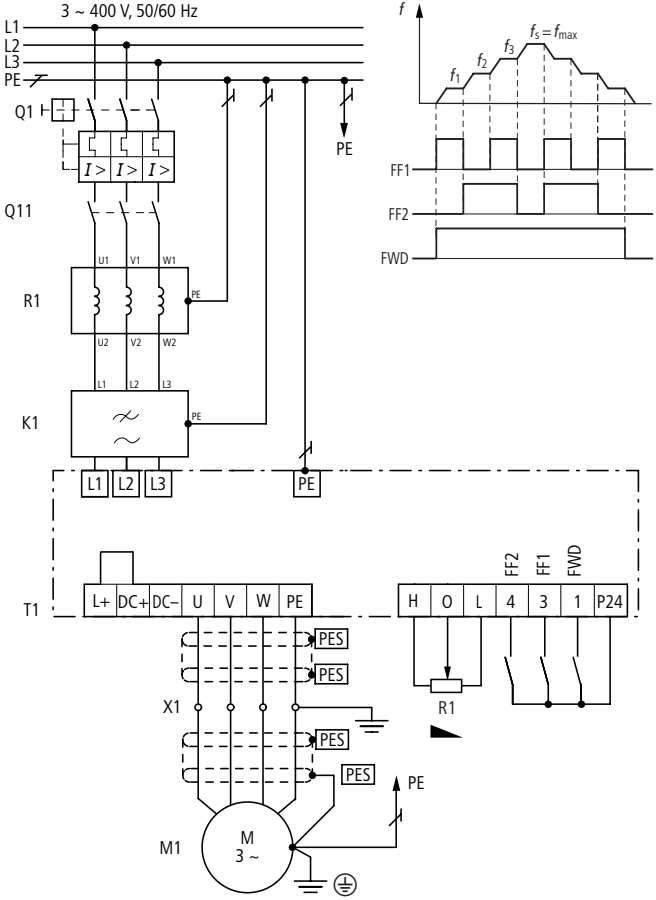

# Electronic motor starters and drives

## Connection examples, DF5 and DV5



### Version A: Motor in delta circuit

Motor: $P$ = 0.75 kW
Mains: 3/N/PE 400 V 50/60 Hz

The 0.75 kW motor described below can be delta-connected to a single-phase 230 V mains (version A) or star-connected to a 3-phase 400 V mains.

Select the appropriate frequency inverter for your mains voltage:

- DF5-322 for 1 AC 230 V
- DF5-340 for 3 AC 400 V
- Model-specific accessories for EMC-complaint connection.

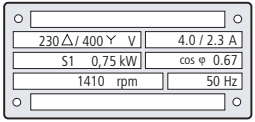


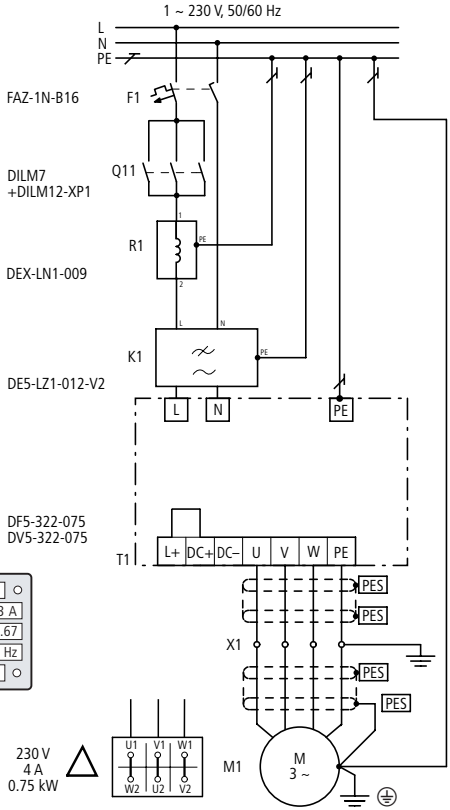

# Electronic motor starters and drives

## Connection examples, DF5 and DV5



**Version B: Motor in star circuit**

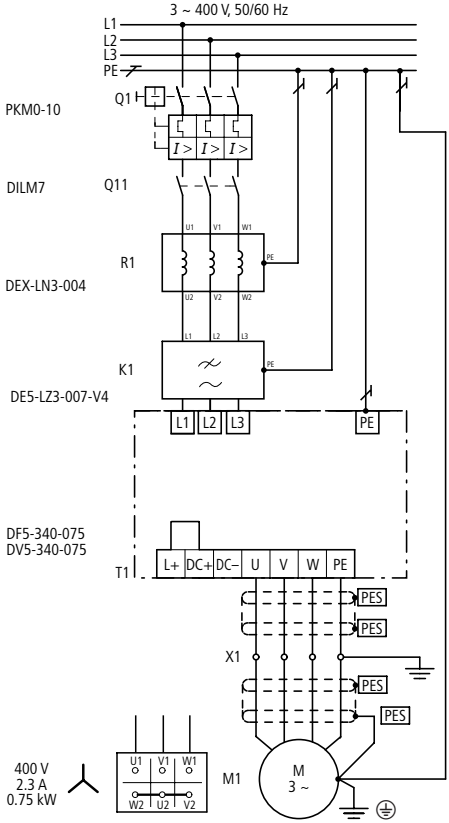

# Notes

**Block diagram, DF6**

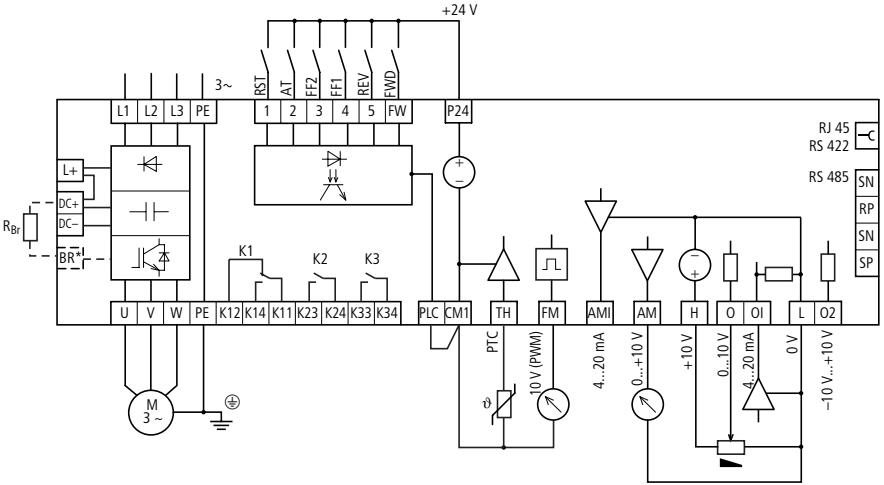


BR* DF6-320-11K, DF6-340-11K and DF6-340-15K only

# Electronic motor starters and drives

## Connection examples, DF6



### Frequency inverter DF6-340-...

**Control section**

Example: Temperature regulation for ventillation system. When the room temperature rises, the fan speed must increase. The target temperature can be set with potentiometer R11 (e.g. 20 °C)

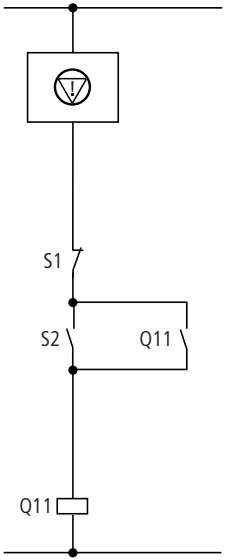


Ⓥ: Emergency-Stop circuit
S1: Off
S2: On
Q11: Mains contactor
Q1: Line protection
PES: Cable screen PE connection
K1: RFI filter

# Electronic motor starters and drives

## Connection examples, DF6



### Wiring

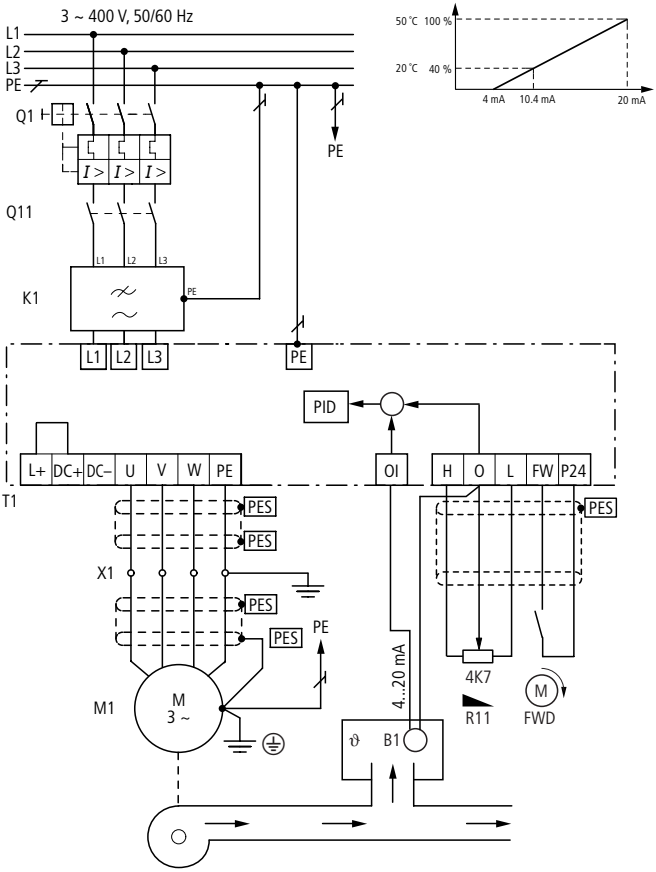

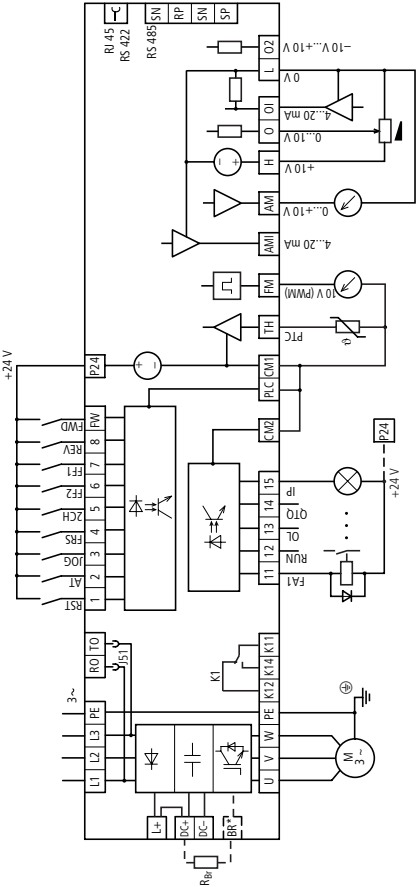


BR* DV6-340-075, DV6-340-11K and DV6-320-11K only

**Block diagram, DV6**

# Electronic motor starters and drives

## Connection examples, DV6

**Block diagram: speed control circuit, vector frequency inverter DV6 with encoder interface module DE6-IOM-ENC**

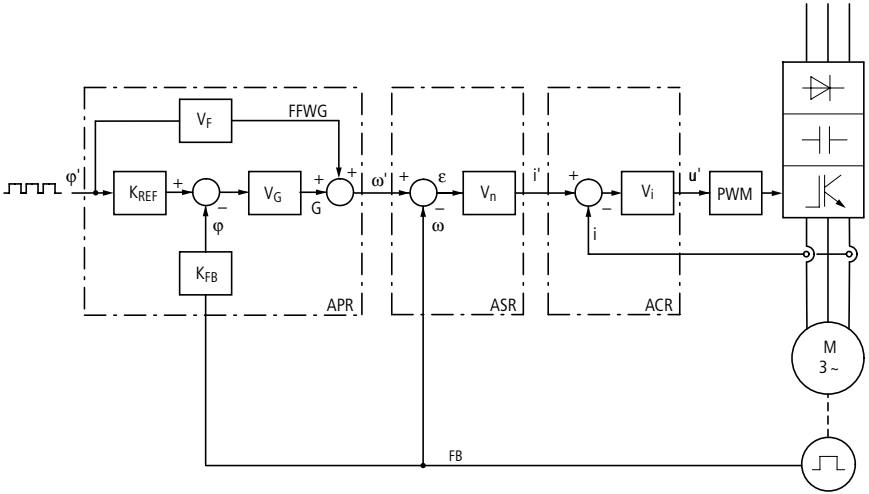

# Electronic motor starters and drives

## Connection examples, DV6



**DV6-340-... vector frequency inverters with built-in encoder module (DE6-IOM-ENC) and external DE4-BR1-... braking resistor**

**Control section**

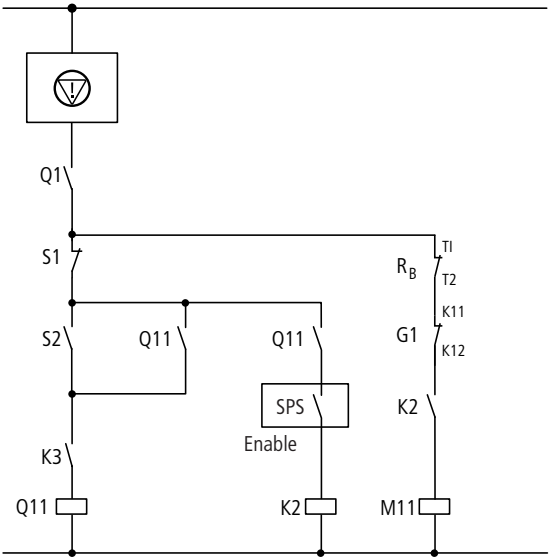


Example:
Hoisting gear with speed regulation, control and monitoring through PLC
Motor with thermistor (PTC resistor)

Ⓥ: Emergency-Stop circuit
S1: Off
S2: On
Q1: Line protection
Q11:Mains contactor
K2: Control contactor enable
$R_B$: Braking resistor
B1: Encoder, 3 channels
PES:Cable screen PE connection
M11:Holding brake

# Electronic motor starters and drives

## Connection examples, DV6



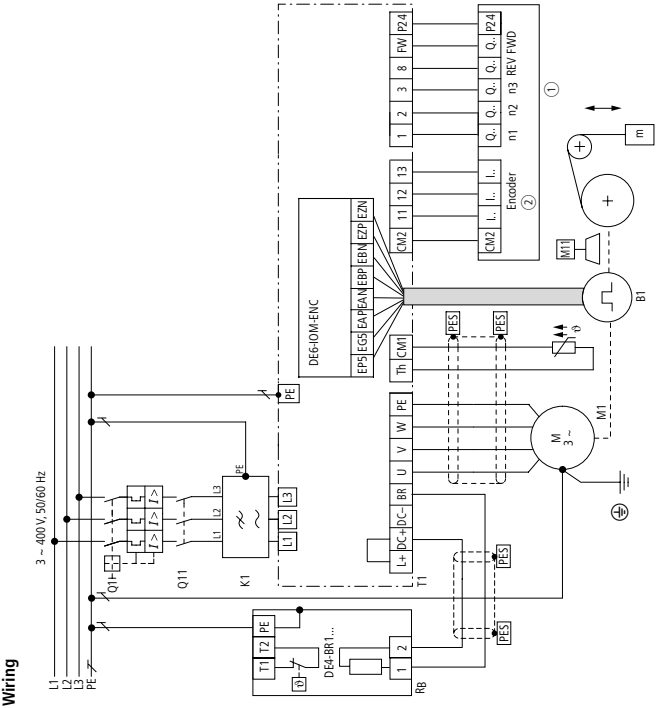

# Electronic motor starters and drives

Connection examples, DV6



**Installing encoder interface module DE6-IOM-ENC**

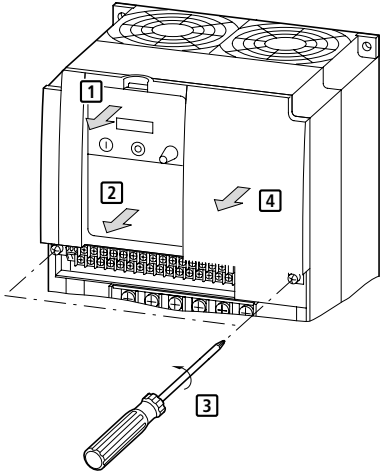


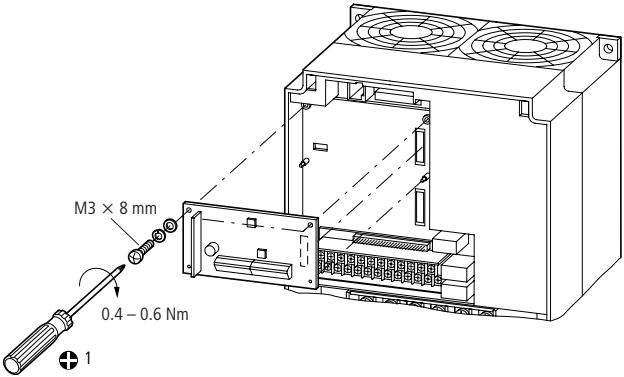

# Electronic motor starters and drives

## Connection examples, DV6



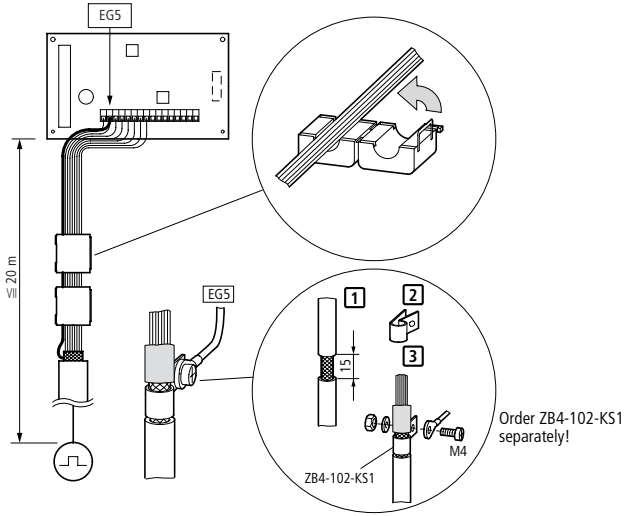


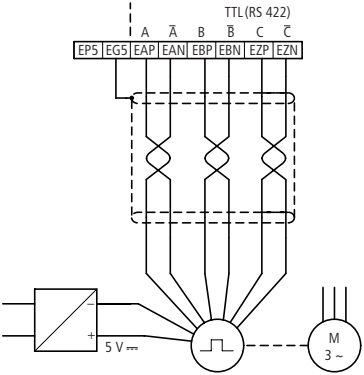

# Electronic motor starters and drives
## Rapid Link system



### Rapid Link system

Rapid Link is a modern automation system for material handling systems. Because the Rapid Link modules can be simply fitted into a power and data bus, it allows electrical drives to be installed and taken into operation much more quickly than with conventional methods.

**Note:**
Before you take the Rapid Link system into operation, you must obtain and read manual AWB2190-1430. This publication is available for download as PDF file from the Moeller Support Portal.

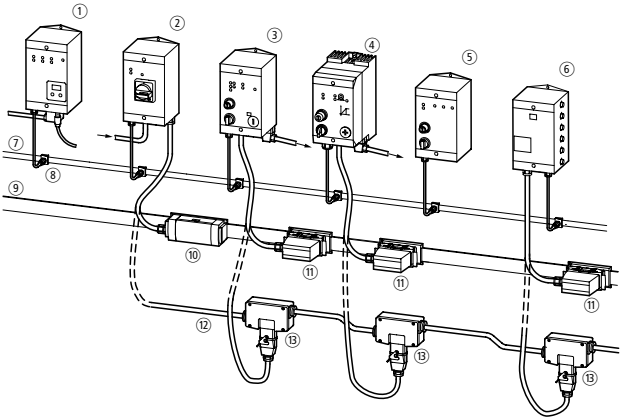


Function modules:

1. Interface control unit → the interface to the open field bus
2. Disconnect control unit → power infeed with lockable rotary handle;
   → circuit-breaker to protect from overload and short-circuits
3. Motor control unit → 3-phase electronic overload protection with DOL starter, expandable DOL starter or reversing starter function
4. Speed control unit→ controls three-phase asynchronous motors with four fixed speeds, bidirectional operation and soft starting
5. Operator control unit → local manual control for conveying equipment
6. Logic control unit → Intelligent unit for autonomous processing of I/O signals

# Electronic motor starters and drives
## Rapid Link system



Power and data bus:
⑦ AS-Interface® flat cable
⑧ Link for M12 connector cables
⑨ Flexible busbar for 400 V ~ and 24 V
⑩ Power feed for flexible busbar
⑪ Plug-in power link for flexible busbar
⑫ Round cable for 400 V ~ and 24 V
⑬ Plug-in power link for round cable

**Engineering**

The Rapid Link function modules are installed immediately adjacent to the drives. They can be connected to the power and data bus at any point without having to interrupt the bus.

The AS-Interface® **data bus** is a system solution for networking different modules. AS-Interface® networks are quick and easy to implement.

AS-Interface® uses a geometrically coded, unscreened flat cable with a cross-section of 2 × 1.5 mm². It is used to transmit both power as well as all data traffic between PLC and I/O and – to some extent – supplies the connected devices with energy.

The installation meets the usual requirements. Engineering is simplified by full flexibility in system layout and mounting.

When a link is connected to the flat cable, two metal pins pierce through the cable's jacket and into the two cores to establish a contact with the AS-Interface® cable. There is no need to cut and strip cables, apply ferrules or connect individual cores.

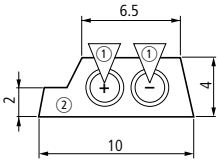


① Piercing pins
② Flat cable, protected against polarity reversal

The **power bus** supplies the Rapid Link function modules with main and auxiliary power. Plug-in tap-off points can be quickly and safely connected at any point along the bus. The power bus can consist either of a flexible busbar (flat cable) or standard round cables:

- The flexible busbar RA-C1 is a 7-core flat cable (cross-section 2.5 mm² or 4 mm²) and has the following structure:

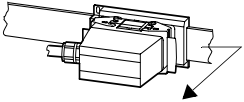

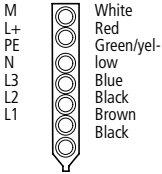


- For the power bus you can also use conventional round cables (cross-section 7 × 2.5 mm² or 7 × 4 mm², outer core diameter < 5 mm, flexible copper conductor to IEC/EN 60228) with round cable feeders RA-C2. The cable can have an external diameter of 10 to 16 mm.

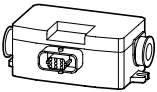

# Electronic motor starters and drives

## Rapid Link system



**Warning!**

- Rapid Link must be operated only on three-phase systems with earthed star point and separate N and PE conductors (TN-S network). It must not be operated unearthed.
- All devices am connected to the power and data bus must also meet the requirements for safe isolation according to IEC/EN 60947-1 Annex N or IEC/EN 60950. The 24 V DC power supply unit must be earthed on the secondary side. The 30 V DC PSU for the AS-Interface®-/RA-IN-power supply must meet the safe isolation requirements according to SELV.

The power sections are supplied through disconnect control unit RA-DI (see illustration below) with:

- $I_e$ = 20 A/400 V at 2.5 mm²
- $I_e$ = 20 to 25 A/400 V at 4 mm².

Round cables up to 6 mm² can be used to feed power to disconnect control unit RA-DI.

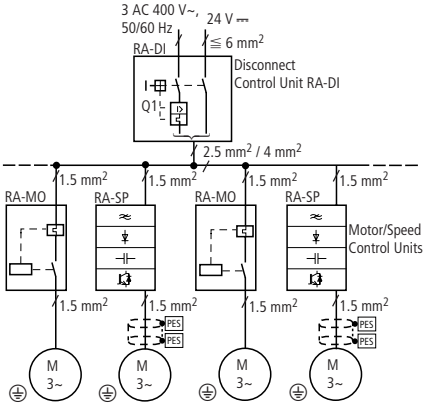


Disconnect control unit RA-DI protects the cable from overload and provides short-circuit protection for the cable as well as all connected RA-MO motor control units.

The combination of RA-DI and RA-MO fulfills the requirements of IEC/EN 60947-4-1 as starter with type "1" coordination. That means that the contactor's contacts in the RA-MO are allowed to weld in the event of a short-circuit in the motor terminal strip or the motor supply cable. This arrangement also conforms to IEE wiring regulations.

# Electronic motor starters and drives

## Rapid Link system

The affected RA-MO motor control unit must be replaced after a short-circuit!

When you configure a power bus with a disconnect control unit, observe the following:

- Even in the event of a 1-pole short-circuit at the line end, the short-circuit current must exceed 150 A.
- The total current of all running and simultaneously starting motors must not exceed 110 A.
- The total load current (about 6 × mains current) of all connected speed control units must not exceed 110 A.
- Observe the voltage drop in your specific application.

Instead of the disconnect control unit, you can use a 3-pole miniature circuit-breaker $I_n \leqq 20$ A and B or C characteristic. Here, you must observe the following:

- The let-through energy $I^2t$ in the event of a short-circuit must not exceed 29800 $A^2s$.
- Therefore the short-circuit current $I_{cc}$ at the mounting location must not exceed 10 kA → characteristic curve.

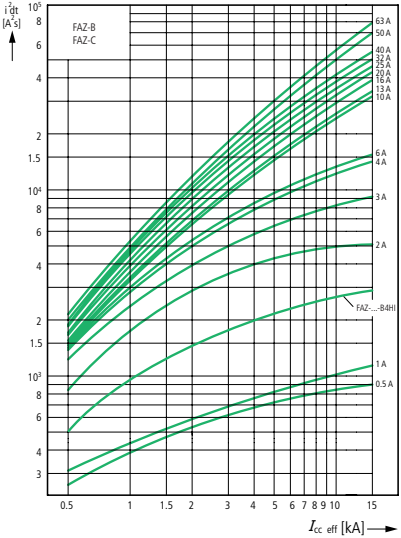

# Electronic motor starters and drives

## Rapid Link system



### Motor control unit

Motor control unit RA-MO allows the direct bidirectional operation of three-phase motors. The rated current is adjustable from 0.3 to 6.6 A (0.09 to 3 kW).

### Connections

Motor control unit RA-MO is supplied ready for installation. The connection to the AS-Interface® data bus and the motor is described below. The connection to the power bus is described in the earlier general section "Rapid Link system".

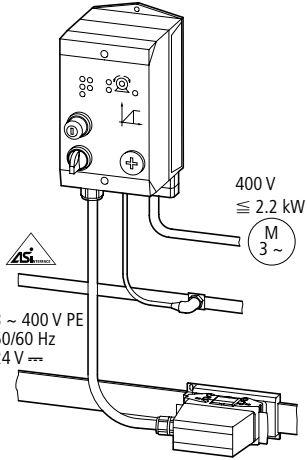


**The unit is connected** to AS-Interface® through an M12 plug with the following PIN assignment:

| M12 plug | PIN | Function |
|---|---|---|
|  | 1 | ASi+ |
| | 2 | – |
| | 3 | ASi– |
| | 4 | – |

**External sensors** are connected through an M12 socket.

| PIN | Function |
|---|---|
| 1 | L+ |
| 2 | I |
| 3 | L– |
| 4 | I |

On the RA-MO the motor feeder features a plastic-encapsulated socket. The length of the motor cable is limited to 10 m.

The **motor** is connected through a halogen-free, 8 × 1.5 mm², unscreened, DESINA-conformant motor supply cable with a length of 2 m (SET-M3/2-HF) or 5 m (SET-M3/5-HF).

Alternatively you can assemble your own motor supply cable with plug SET-M3-A with 8 × 1.5 mm² contacts

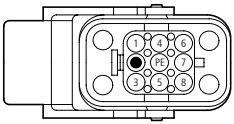

# Electronic motor starters and drives

## Rapid Link system



| | SET-M3/... | M 3~ | ϑ | |
|---|---|---|---|---|
| 1 | 1 | U | – | – |
| • | – | – | – | – |
| 3 | 3 | W | – | – |
| 4 | 5 | – | – | B1 (~/–) |
| 5 | 6 | – | T1 | – |
| 6 | 4 | – | – | B2 (~/+) |
| 7 | 2 | V | – | – |
| 8 | 7 | – | T2 | – |
| PE | PE | PE | – | – |

Motor connection without thermistor

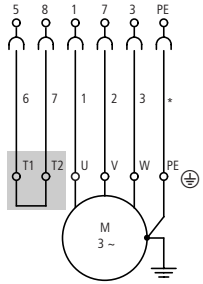


Motor connection with thermistor

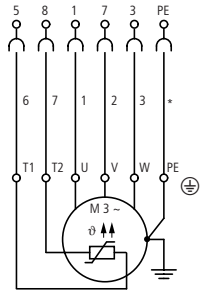


If motors are connected without PTC thermistor (thermoclick), cables 6 and 7 must be linked at the motor; otherwise the RA-MO issues a fault message.

# Electronic motor starters and drives

## Rapid Link system



**Note:**

The two connections illustrated below apply only for motor control unit RA-MO.

Connecting a 400 V AC brake:

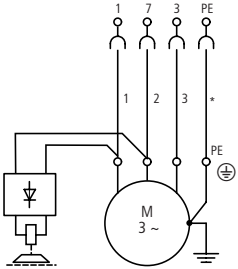


Connecting a 400 V AC brake with rapid braking:

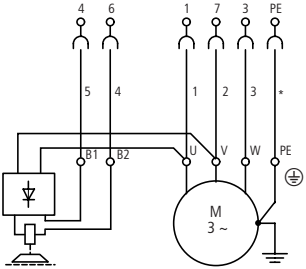


For controlling braking motors, their manufacturers provide braking rectifiers, which are fitted in the motor terminal strip. If the DC circuit is opened at the same time, the voltage at the braking coil drops off much quicker, causing the motor to also brake more quickly.

# Electronic motor starters and drives

## Rapid Link system



### Speed Control Unit RA-SP

Speed control unit RA-SP is used for electronic variable speed control of three-phase motors.

**Note:**

Unlike the other Rapid Link system devices, the RA-SP speed control unit's enclosure is fitted with a heat sink and requires an EMC-conformant mounting and connection.

**Connections**

Speed control unit RA-SP is supplied ready for connection. The connection to the AS-Interface® data bus and the motor is described below. The connection to the power bus is described in the earlier general section "Rapid Link system".

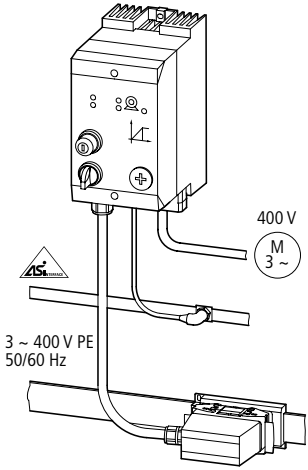


The unit is connected to AS-Interface® through an M12 plug with the following PIN assignment:

| M12 plug | PIN | Function |
|---|---|---|
|  | 1 | ASi+ |
| | 2 | – |
| | 3 | ASi– |
| | 4 | – |

On the RA-SP the motor feeder features a metal-encapsulated socket. To meet EMC requirements, this is connected with PE and heat sink over a large area. The matching plug is also metal-encapsulated and the motor cable is screened. The length of the motor cable is limited to 10 m. The motor cable's screen must have a large-area connection with PE at both ends, and the **motor connection** terminals must also, therefore, meet EMC requirements.

The motor is connected through a halogen-free $4 \times 1.5\ mm^2 + 2 \times (2 \times 0.75\ mm^2)$, screened, DESINA-conformant motor supply cable with a length of 2 m, (SET-M4/2-HF) or 5 m, (SET-M4/5-HF).

Alternatively you can assemble your own motor supply cable with plug SET-M4-A, with $4 \times 1.5\ mm^2 + 4 \times 0.75\ mm^2$ contact.

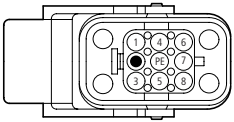

# Electronic motor starters and drives

## Rapid Link system



| | Servo cable SET-M4/... | M 3~ | ϑ | RA-SP2-... 341-... 400 V AC | 341(230)-... 230 V AC |
|---|---|---|---|---|---|
| 1 | 1 | U | – | – | – |
| • | – | – | – | – | – |
| 3 | 3 | W | – | – | – |
| 4 | 5 | – | – | B1 (~) | B1 (~) |
| 5 | 7 | – | T1 | – | – |
| 6 | 6 | – | – | B2 (~) | B2 (~) |
| 7 | 2 | V | – | – | – |
| 8 | 8 | – | T2 | – | – |
| PE | PE | PE | – | – | – |

# Electronic motor starters and drives

## Rapid Link system



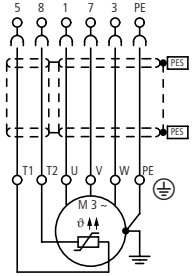


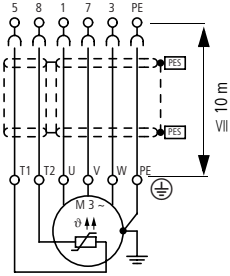


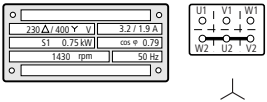


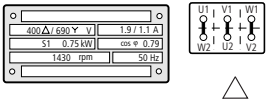


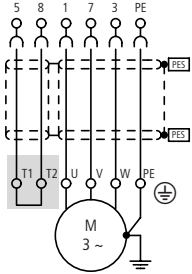


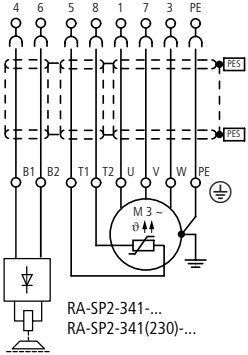


For controlling braking motors, their manufacturers provide braking rectifiers, which are fitted in the motor terminal strip.

**Note:**
When using speed control unit RA-SP, do not connect the braking rectifier directly to the motor terminals (U/V/W)!

# Notes