xStart – The New Generation: 100 Years of Moeller contactors – Continuous Progress –

1904

1931

1946

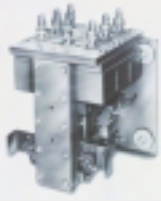

1970

1984

1994

1999

2004

xStart

The complete range of contactors, efficient motor-starters and controlled drives for the motor circuit. New simple to install solutions based on clever communication.

DIL contactors

PKZ motor-protective circuit-breakers

MSC motor-starters

DS4 softstarters

Drives

Rapid Link

Technical Essay

Dipl.-Ing. Wolfgang Esser

MOELLER

Think future. Switch to green.

Overview of Contents and Preface

xStart, the New Generation of Motor-Starters, again with application-orientated special features!

A contactor is no longer enough. These days, the expectation is for a motor-starter; suitable for world markets; a partner for the bus and the electronic signal processing level; universally applicable, in the power distribution board or in the modern decentralised control system; in North America as well as in the IEC world.

There is no doubt that motor-protective switching devices are significant parts of motor-starters. Even today, in the new generation, we still need contactor relays and motor-protective relays.

Two market segments need to be served: with increasing importance on the one hand the superior fuseless range, and partly regionally configured, the solution with fuses. The steps that innovation takes however, must not be too great, even today. But the customer wish for exchangeable Standard-compliant devices still leaves enough room for modern differentiation. The foundation is laid for exciting onward developments. Contactors still come from Moeller and they are still called ***DIL***, and motor-protective circuit-breakers are still called ***PKZM***, what else.

Summary for People in a Hurry

Here is a short overview for people who don't have the time to read the whole article. Should the reader be particularly interested in certain items, then he can find the paragraphs with detailed descriptions from the index.

Motor-protective circuit-breakers, contactor relays, contactors and motor-protective relays are often combined within switching installations. Moeller therefore puts these devices together in **one product system suitable for world markets**.
Optimised interfaces and significantly **reduced mounting and wiring effort** contribute to **type-tested combinations with enhanced safety and reliability**.
As far as contators are concerned, **all the three-phase motor ratings are covered by fewer device variants**.
The selection criterion for switchgear is the rated operational current, and this is now also included in the self-explanatory type reference.
The new developments have brought about **a considerable increase in performance capability**, as expressed in the Amps per mm of device width.
A further **reduction of power losses** now allows a real **increase in packing density** to be implemented in the switchgear cabinet. All the direct-on-line starters up to 15 kW now have a width of only 45 mm. To put it succinctly: **the customer gets more device and even higher quality for, in most cases, less money and with additional application benefits**.

The terminals up to 12 A and 16 A offered alternatively **in screw or tension-spring technology**, provide the majority of main current connections as **box terminals, each of which with two separate terminal chambers**.
Motor-protective circuit-breakers and contactors are offered with the option of the new time-saving Kombi plug-in technology. This means one plug-in action with visible isolating gap instead of six times screw fastening.
On reversing starter combinations, even the control wiring can be plugged in.
The installation costs are lowered further through the mounting and wiring advantages offered by the new mounting rail and busbar adapter.
In response to numerous customer requests, motor-protective circuit-breakers **for direct mounting on simple machines** are now again available **with a pushbutton actuated switching option**.
This is complemented by optimised **insulated enclosures and flush-mounting plates**. In a dangerous situation, the device can be simply 'knocked out' using the **Emergency-Stop button**. This product system was developed in general in close contact with customers in Germany and abroad.
The new generation also includes **contactor relays and motor-protective relays**. These products have not so far been fully replaced by others since the electrical separation of mechanical contacts continues to be an important feature, and because motor protection using relays represents a cost-efficient solution. This allows the option of implementing both the **fused** and the more advantageous **fuseless motor-starters**.

Moeller offers to the **trade, panel builders and machine and installation equipment manufacturers a highly modern and economical low-voltage switchgear programme**. This year in addition, the new switchgear will be complemented by the new **xEnergy** switchgear cabinet system.
In other words, **a rounded, mutually complementary range from a single source**, for sophisticated customers in power distribution and control systems and for satisfied end-users.

A Transparent System

The diagrams, **Figures 1** and **23**, show the scope of the new system. It is complemented by the modern circuit breakers, *NZM1* and *NZM2*, that round off the motor-starter range at the high current end of up to 150 A. But even above the new system described here, Moeller offers state-of-the-art and especially powerful motor-starters.
The introduction to the market of the system is to take place in stages. By the autumn of 2004, the contactor relays and contactors up to 65 A, together with the motor-protective circuit-breakers and motor-protective relays will be available. This first offering will be complemented by ready-for-connection motor-starters, either for top-hat rail fixing or on busbar adapters.
The motor-protective circuit-breakers are available with high degree of protection in insulated enclosures for separate mounting and with flush-mounting plates for mounting directly on the machine. The contactors for rated currents above 65 A will be available in May 2005.

A new item in the range is the motor-protective circuit-breaker up to 16 A, with conventional pushbutton actuation. Our customers have demanded it. Pushing a button is obviously more popular than flicking a toggle or rocker.

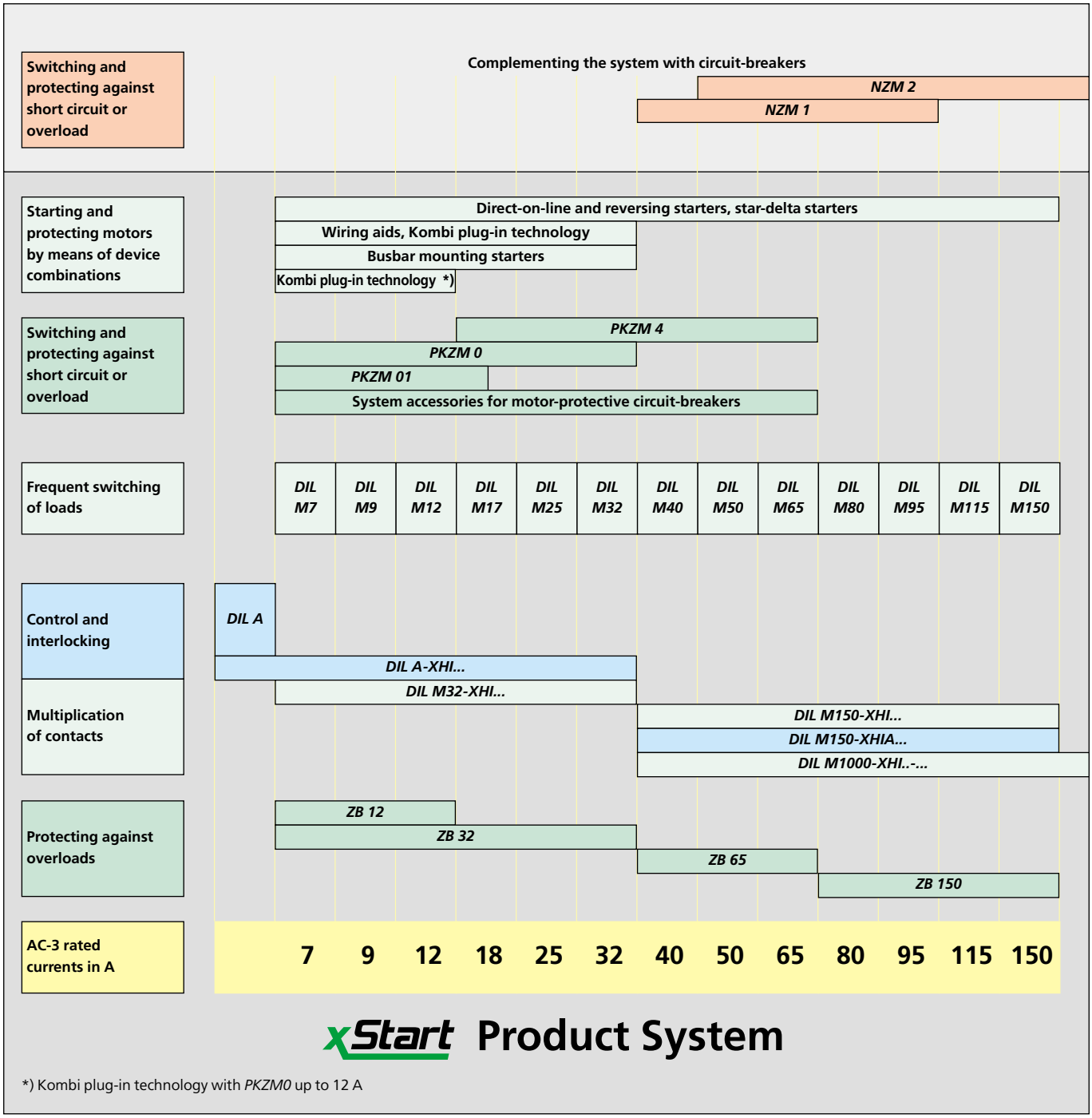

Figure 1: System overview, scope of the new product system described

Clever intersections

The range described comprises motor-starters up to 150 A. Where should the intersections between sizes be? Which features must be the basic ones? Where are the optimal interfaces to optional functions? Where is there potential for differentiation? Experience, analysis and numerous conversations with customers in Germany and abroad provided important decision-making tools for the product management. Even before the designer draws the first line, the system costs are established conceptionally for the entire life cycle of the system, virtually unalterably.

Clever management of variants can obviously play a decisive role in influencing the system costs along the entire value creation chain.
The various customer benefits result from significant reductions in:

- The product costs,
- The number of basic data sets in the goods management systems,
- The logistics costs, worldwide,
- The material usage in the various storage facilities,
- The expenditure on obtaining approvals,
- The cost of the many different handling processes during
  - Selection,
  - Engineering,
  - Ordering,
  - Delivery,
  - Goods inwards procedures
  - and order picking,
- Mounting and wiring
- And commissioning and servicing.

Costs can be lowered considerably for all the participants in the value creation chain with a favourable effect on the individual component price, at the manufacturer's end and onwards along the entire path via dealers, processors of all kinds, right up to the end user.

The added value lies in the width

The space for switchgear installations is often limited, the critical dimension in most cases being the width of the switchgear cabinet. Any reduction in the width of the switchgear therefore brings added benefits that can often be calculated precisely. **Table 1** and **Figure 2** show the reduction in geometrical units from 7 to 4 on the one hand, and that the number of different unit widths in the system up to 150A has decreased from 5 to 3. At the same time, most of the current ratings have been increased by the few Amps that make the difference in practice. The new, smallest size component, being a contactor relay and contactor, represents a good compromise between minimal dimensions, high physical performance capability and additional handling benefits. **Table 2** shows, that in spite of the significant reduction in component width, further user benefits were achieved. Built-in auxiliary contacts in contactors from the most frequently demanded rating range, up to 15 kW, do more than just increase the commercial benefit by the value of the auxiliary contact.This auxiliary contact, now being generally available, does not require its own enclosure, neither does it represent another item in the parts list. What is more, the customer does

AC-3 Current in A	Previous range	Mounting widths of contactor relays and contactors								New range	AC-3 Current in A
At 400 V	Type	45 mm	60 mm	70 mm	100 mm	120 mm	45 mm	55 mm	90 mm	Type	At 400 V
142	*DIL 4AM*					7			4	***DIL M150***	**150**
104	*DIL 4M*					7			4	***DIL M115***	**115**
85	*DIL 3AM*				6				4	***DIL M90***	**95**
72	*DIL 3M*				6				4	***DIL M80***	**80**
58	*DIL 2AM*			5				3		***DIL M65***	**65**
43	*DIL 2M*			5				3		***DIL M50***	**50**
36	*DIL 1AM*		4					3		***DIL M40***	**40**
30	*DIL 1M*		4				2			***DIL M32***	**32**
22,5	*DIL 0AM*	3					2			***DIL M25***	**25**
15,5	*DIL 0M*	3					2			***DIL M17***	**18**
12	*DIL 00AM*	2					1			***DIL M12***	**12**
8,8	*DIL 00M*	2					1			***DIL M9***	**9**
8,8	*DIL EM **	1									
6,6	*DIL EEM **	1					1			***DIL M7***	**7**
-	*DIL R*	2					1			***DIL A***	**-**
-	*DIL ER **	1									

Table 1: Variant management as illustrated by the example of the new unit sizes and widths. The streamlining of the range from 7 to 4 component sizes (to 57%) and from 5 to 3 component widths (to 60%) has beneficial effects along the entire value creation chain. The current rating increase from 25 A to 32 A (28 %) enables motors up to 15 kW to be switched and protected at an economical component width of only 45 mm. In other words, approximately 90% of all three-phase motors can be controlled by 45 mm of motor-starter width.
* The DIL E contactors are retained in the range for special applications

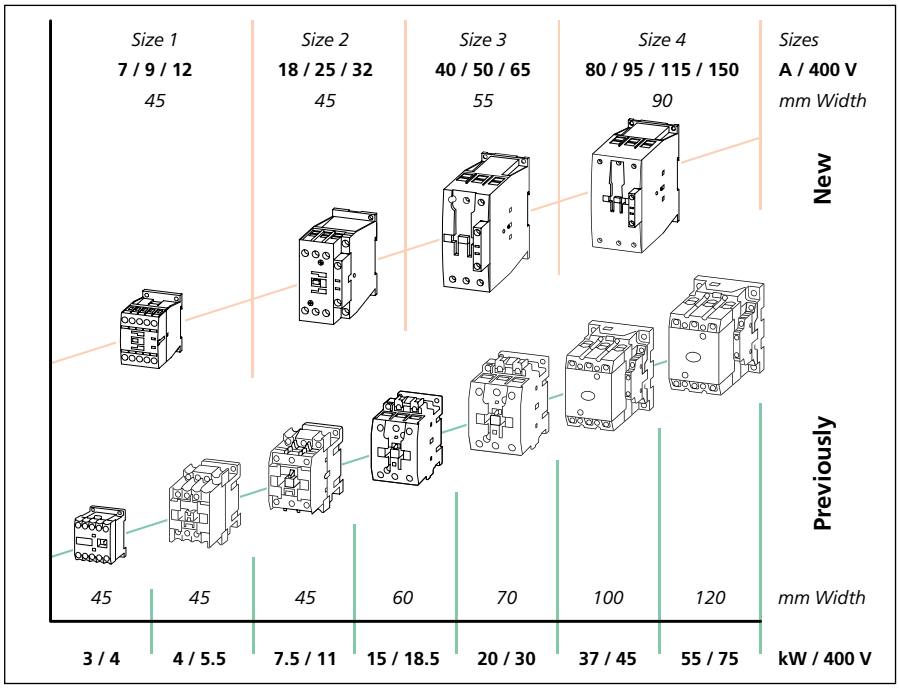

Figure 2: Reduction in the number of size variants and reduction of mounting widths above 25 A. DIL E contactors remain in the range for special applications.

Table 2: Not only was the critical mounting width significantly reduced, but at the same time, the coil connections on all the contactors were made more accessible. All the contactors in the most popular range, up to 15 kW, are now equipped with one auxiliary contact as standard. The table allows a comparison of the currents that can now, or could be previously, controlled by component widths corresponding to the new dimensions.

Additional benefits from the new component widths				
Type	**Width**	Reduction in width relative to the previous width at the current rating	**Benefits in addition to the reduction in width**	
DIL M32	45 mm	**- 25 %**	In all contactors up to 15 kW / 400 V 1 auxiliary contact built into a mounting width of 45 mm	On all contactors, coil connections located at the front instead of behind the main current connections
DIL M40	55 mm	**- 9 %**		
DIL M50	55 mm	**- 21 %**		
DIL M65	55 mm	**- 21 %**		
DIL M80	90 mm	**- 10 %**		
DIL M95	90 mm	**- 10 %**		
DIL M115	90 mm	**- 25 %**		
DIL M150	90 mm	**- 25 %**		

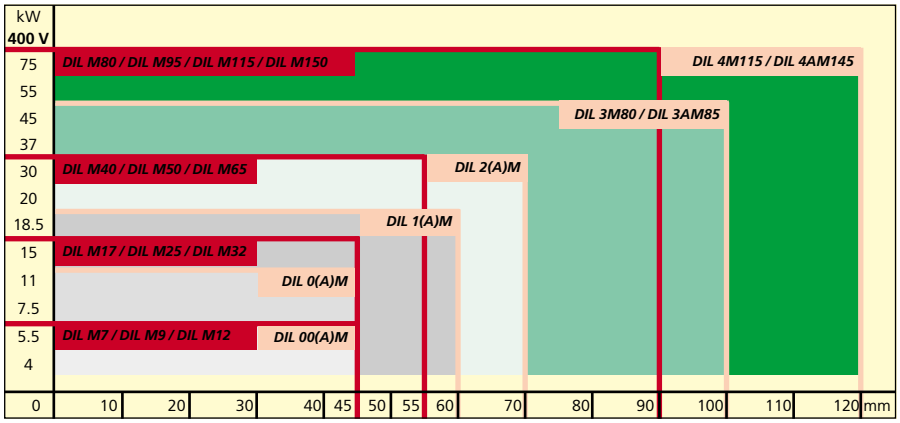

Figure 3: The component widths of the new contactors (within the red lines) were reduced and the controllable AC-3 currents additionally increased in part of the range. The orange delineation shows the contactor range now to be replaced.

Performance capability: switchable A / mm available width			
Available width in a small enclosure:	**45 mm**	**55 mm**	**90 mm**
Current: previously	**22.5 A**	**22.5 A**	**58 A**
Current: Xstart	**32 A**	**65 A**	**150 A**
Enhancement:	**+ 42%**	**+ 188%**	**+ 158%**

Figure 4: By reducing the component width and simultaneously increasing the current ratings, we have significantly raised the contactor performance capability.

not need to fit it. It can function as 1 Make contact or 1 Break contact as required.
In the past, the auxiliary contact was often lacking. It is very useful though. In many applications now, the base device with its shallow mounting depth is sufficient. This is very beneficial particularly where it is individually housed in ever smaller machine enclosures or in the extremely compact withdrawable distribution units (MCC). The new *DIL MP20*, has a fourth main contact fitted in place of the auxiliary contact for AC-1 currents up to 20 A. The reduction in device width (**Figure 3**) and simultaneous increase in operational current significantly raises the performance capability of the new components, as shown in **Figure 4** by the controllable Amps per available width.

Not only electrical contacts

A system is more than just the sum of its individual parts. The key to systematic flexibility lies in the well thought-out mechanical contact points between the components of the system. These points of contact are the ones that generate the costs. They require precision in dimensional tolerances, in forces at work, and must be as simple as possible but also safe to handle. The intersections represent the conceptual challenge for the product manager, the designer, the toolmaker, the production specialist and the quality control engineer. As far as Moeller is concerned, it is here that the potential for differentiation and customer benefit lies, also in the new generation. **Figure 5** shows the main mechanical contactor interfaces. The following paragraphs introduce the tasks and advantages of these interfaces. Some of the interfaces can be used for several different links. They allow the flexibility that our customers expect, to enable them to meet their widely differing tasks around the world. Every customer wants to see his own requirements met as precisely and economically as possible. This system opens up significantly more options for solutions than did older systems.

How about some add-on features

Safety circuits have become much more complex. Also, everyone wants to be better informed. Equally, for a simple sequencing control, there is no need for a complete switchgear installation. In other words, there are many reasons for using auxiliary contacts. The new auxiliary contacts have also become more universally applicable and therefore offer more scope. The limits are set by international Standards and by the regulations governing the operating media of big operators. Auxiliary contact modules for contactor relays require different terminal markings from those for contactors. But as far as construction and handling are concerned, the modules for contactor relays and for contactors are the same. Up to and inclusive of the *DIL M32 (15 kW)*, i.e. for all 45 mm wide contactors, the modules are of the same design, with 2 or 4 auxiliary contacts. There are variations in contact configuration for different control tasks. Various combinations of Make and Break contacts and a number of special modules such as the *DIL A-XHIV11* or

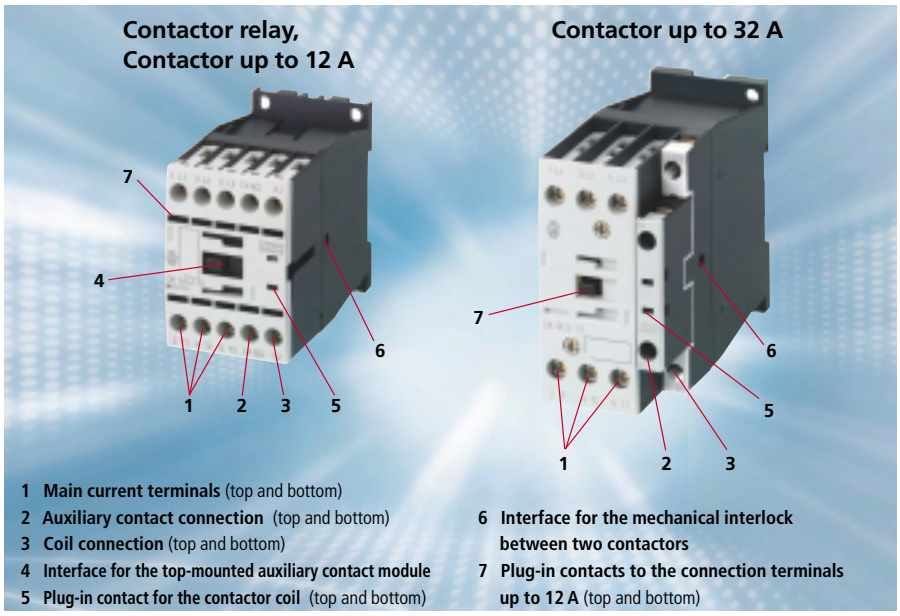

Figure 5: Location of the connection terminals and the mechanical interfaces for top-mounted and side-mounted auxiliary contacts on the 45 mm wide contactors up to 32 A. There are further interfaces to the contactor coil, and units up to 12 A have sockets for the Kombi plug-in technology. These sockets enable wiring-error free connections to be made quickly between the system components for direct-on-line and reversing starters.

DIL A-XHIV22 are available, as can be seen from **Table 3**. An auxiliary contact built into the base unit (up to 32 A), as well as the two- or four-pole auxiliary contact modules, enable economical ways of adapting to the requirement for auxiliary contacts without a great deal of fitting work. Contactor relay auxiliary contact modules can also be used for contactors up to 32 A. Such combinations, however, do not conform to the Standard terminal markings, and are therefore less to be recommended.
The regulations governing operating media in certain large firms must be noted. These are intended to prevent mistakes between make and break contacts when exchanging devices. These concerns demand the preferred contact configuration every time, i.e. version E to the Standards DIN EN 50 011[1, 2] and 50 012 [3] (**Figure 6**).
The Moeller Main Catalogue assists in selecting Standard-compliant devices. Large concerns also limit the diversity of admissible and theoretically possible combinations of auxiliary contacts by imposing their own in-house standards.
With contactors, a distinction must be made between the types up to 32 A, which have a built-in auxiliary contact (**Figure 7**) and the larger contactors without integral auxiliary contact.
The choice for contactors > 32 A is between top-mounted auxiliary contact modules for the narrow style starter, and the side-mounted auxiliary contact modules for the *flat style of motor-starter* (**Figure 8**). No one in fact uses these larger contactors without auxiliary contact modules. To work out whether or not you need them would come more

Admissible auxiliary contact configurations

Type	Basic	For narrow style Top-mounted 2-pole	For narrow style Top-mounted 4-pole	For flat style Side-mounted 1x right and 1x left 2-pole Inside	For flat style Side-mounted 1x right and 1x left 2-pole Outside	Total number of auxiliary contacts
		DIL A –XHI..				
DIL A	4	-	-	-	-	4
	4	1	-	-	-	6
	4	-	1	-	-	8
		DIL M32-XHI..				
		DIL A –XHI..				
DIL M7... M32	1	-	-	-	-	1
	1	1	-	-	-	3
	1	-	1	-	-	5
	1	1 *)	-	-		3 *)
	1	-	1 *)	-	-	5 *)
		DIL M150-XHI..		*DIL M1000-XHI..-..*		
		DIL M150-XHIA..				
DIL M40... M65	-	1	-	-	-	2
	-	-	1	-	-	4
	-	-	-	2	-	4
	-	1	-	2	-	6
DIL M80... M150	-	1	-	-	-	2
	-	-	1	-	-	4
	-	1	-	2	-	6
	-	-	1	2	-	8
	-	-	-	2	2	8
***) Deviation from the Standard terminal marking**		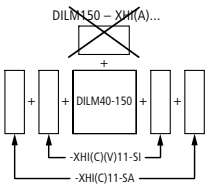		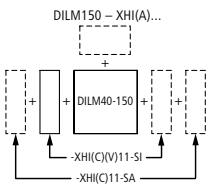		

Table 3: The table shows the admissible auxiliary contact configurations on contactor relays and contactors. Where auxiliary contact modules for contactor relays (light blue) are used for contactors (light green), the terminal markings in some cases deviate from the Standard. Additional auxiliary contact modules for contactors are preferably to be combined with base units that have an auxiliary make contact built-in.

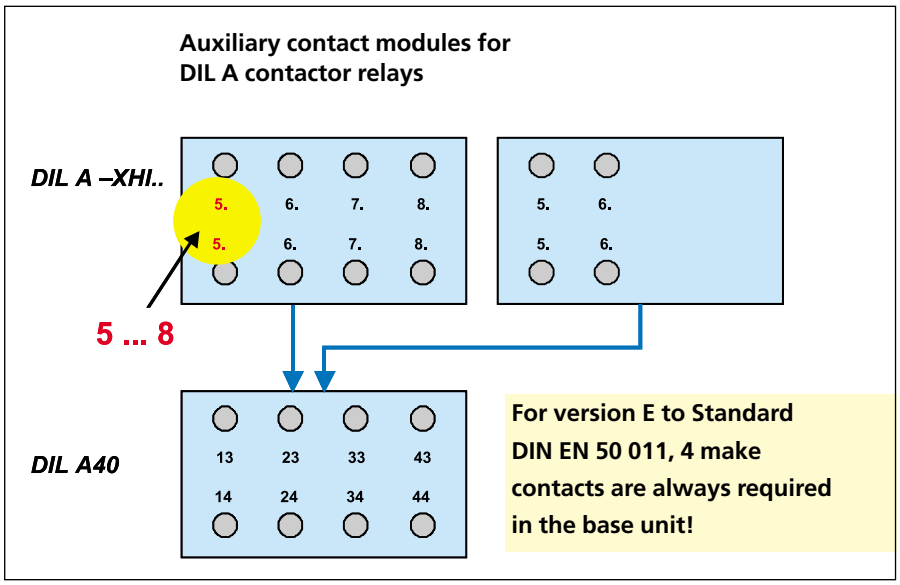

Figure 6: Table 1 of DIN EN 50 011 [1] recommends the use of 'contactor relays with code letter E'. With two-tier contactor relays (base unit + top-mounted auxiliary contact module), a contactor with 4 make contacts (DIL A-40) must be used as base unit in order to achieve terminal markings to version E.

expensive than the auxiliary contact module itself. By the way, the side-mounted auxiliary contact modules, in a single version, can be used right up to the very large contactors (*DIL M1000, DIL H2000*) up to 2000 A. Now you simply and securely snap them on. **Figures 9** to **11** show the different auxiliary contact configurations achievable on contactors and their terminal markings. And all the auxiliary contact modules described are available either with screw terminals or with spring-loaded terminals at the same price. Both types of connection have their faithful following and it is difficult to persuade customers of the benefits of the other termination. Manufacturers, logistics operators, wholesalers and probably also end users meanwhile dream in vain of a single solution.

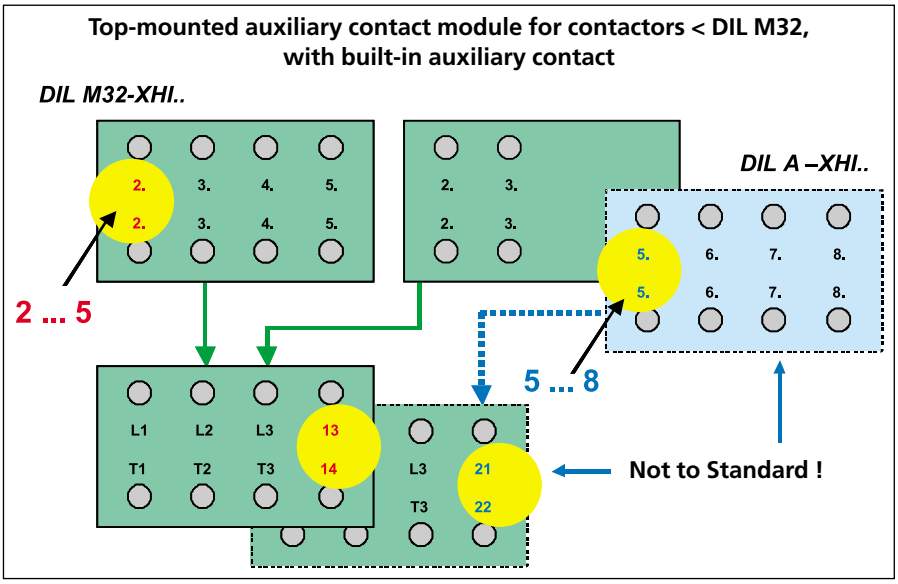

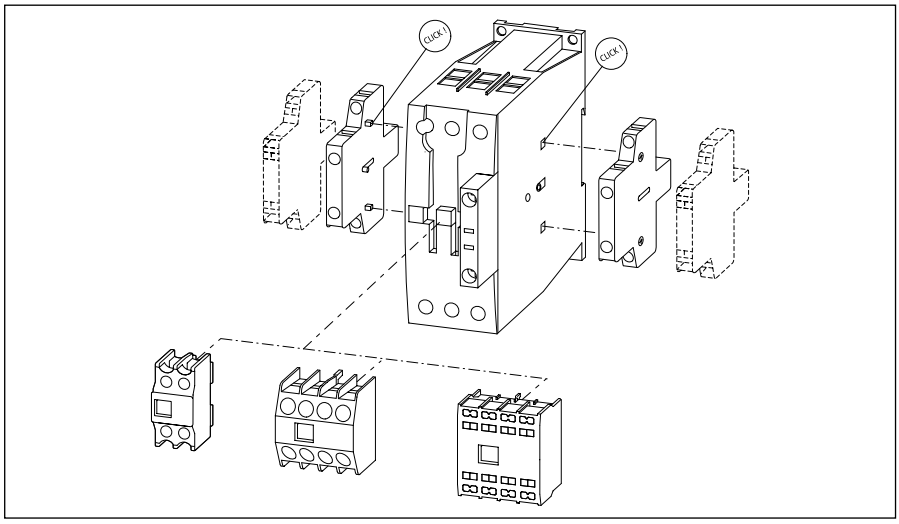

Figure 7: Where contactors have a built-in auxiliary contact, this contact should be a make contact according to the Standard. The terminal markings of the additional auxiliary contact module begin with the decade 2. Break contacts in the base unit and auxiliary contact modules of contactor relays can be used, however they do not conform to the preferred equipment to Standard.

Figure 8: On the larger contactors it is possible to chose between slim or flat style contactors by selecting top-mounted or side-mounted auxiliary contact modules. Even the combination of both styles is admissible. Three variants of contact markings result as shown in Figures 9 to 11.

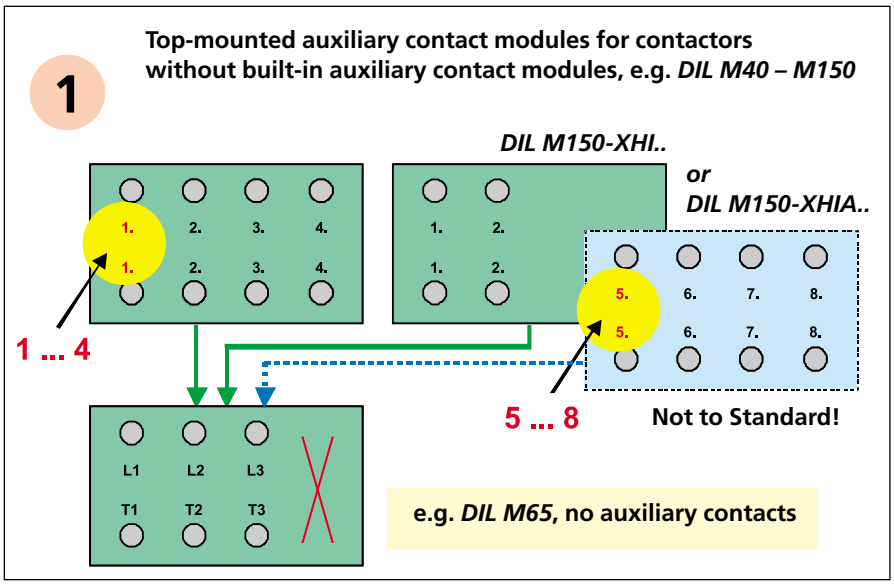

Figure 9: Variant 1, use of top-mounted auxiliary contact modules:
The auxiliary contact module terminal markings begin with decade 1. Terminal markings beginning with decade 5 are possible, but do not conform to Standard.

Figure 10: Variant 2, use of side-mounted auxiliary contact modules:
The auxiliary contact module terminal markings begin with decade 1. Internal or external auxiliary contact modules can be used, depending on the physical contactor size.

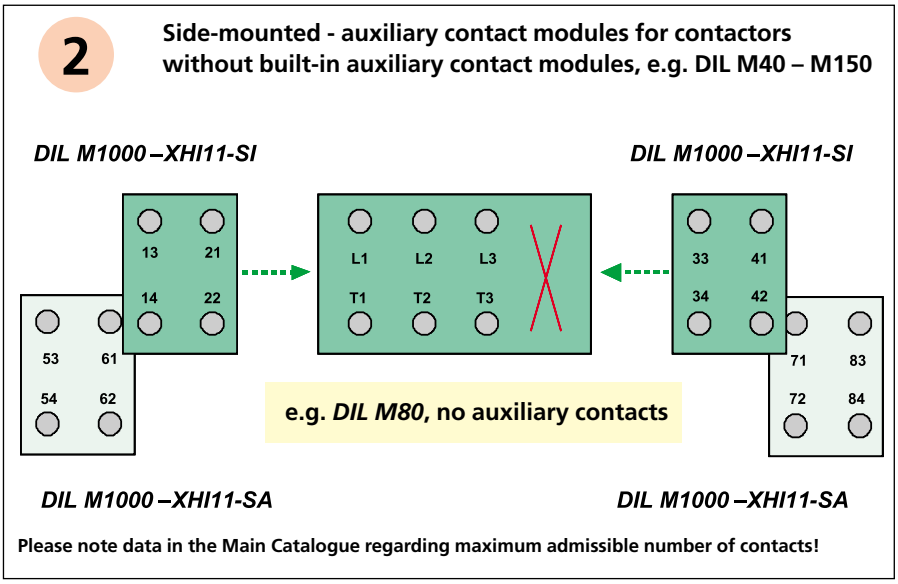

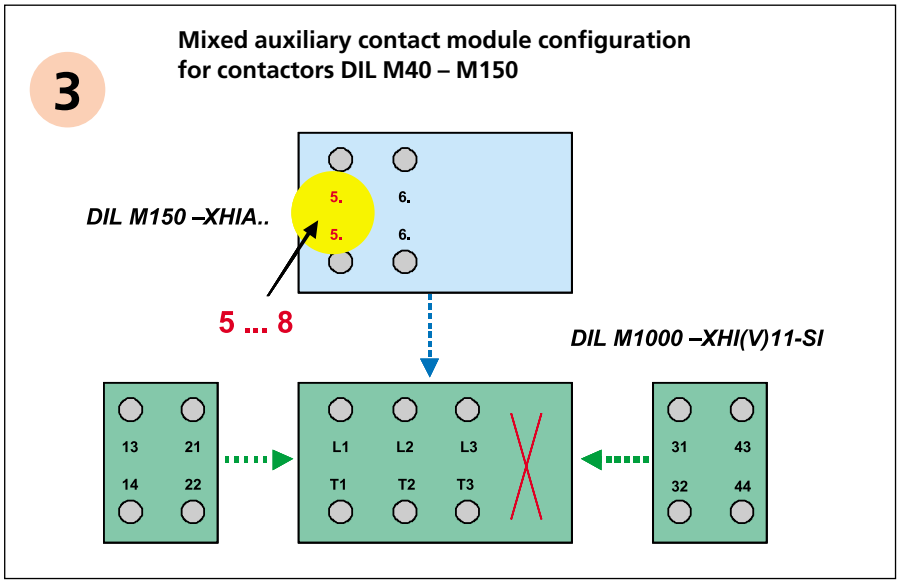

Figure 11: Variant 3, use of side-mounted and top-mounted auxiliary contact modules:
The terminal markings of side-mounted auxiliary contact modules begin with decade 1. Internal or external auxiliary contact modules can be used, depending on the physical contactor size. The contact markings of top-mounted auxiliary contact modules begin with decade 5.

Principal differences between AC and DC drives			
Feature	**Conventional AC drive**	**Conventional DC drive**	**Modern electronically assisted DC drive from Moeller**
Coil current	Determined by: frequency, resistive and inductive coil impedance	Determined by: resistive coil impedance	Determined by: changeover to reduced sealing voltage, (approx. 0.1 x Un), thereby extremely reduced sealing consumption • *very small heat rise* • *no interval required between the contactors*
Power consumption	Pull-in power significantly higher than sealing power, switch-On inductivity is much lower than in the On position, due to relatively large gap between the pole surfaces	Pull-in = Sealing power	Sealing power extremely low, pull-in power approximately of the same magnitude as with conventional DC drive
Drive force proportional to the square over the coil current	Force alternates between 0 and F_{max} with a frequency of 2 x f(i)	Proportional to the rise in current	Proportional to the rise in current
	Short-circuit rings necessary to ensure that the force is > 0 at a travel of = 0 mm	Force is always > 0, since the current is always > 0	Force is always > 0, since the current is always > 0
	Current controlled from pull-in to sealing by altering the inductivity (gap between pole surfaces)	Constant current due to constant resistance	Quasi time-controlled changeover between a pull-in and a sealing circuit
Construction of drive	Simple	More complex and larger than AC drive	Dimensions of AC and DC drive identical
Iron core	Sheet metal	Solid	Sheet metal
Generation of noise	Hum is possible in sealing operation	No hum	No hum
Add-on functions	Optional, external suppressor circuit	Mostly external suppressor circuit	Generally built-in suppressor circuit (function as bridge regulator and rapid de-energization) • *Prevents damaging voltage peaks upon switch-Off*
			Protection against polarity reversal by diode (device does not switch On!) • *Protects the electronics in the event of wrong connection*

Table 4: The Table shows the main differences between conventional AC and DC drives and the new electronically assisted DC drives.

Powerful drives for every application

The application spectrum of the contactors described is extremely wide. The various actuating voltages, frequencies and the multitude of applications (AC and DC required) througout the world, necessitate an alternating current and a direct current magnet system in each case, to ensure the reliable movement of the contact apparatus (**Table 4**). The new magnet systems are the heart of the contactors. Careful dimensioning of the magnet systems has a critical influence on mechanical and electrical contact lifespan, reliable contact operation, maximum admissible contact configuration, admissible mounting positions, voltage tolerance range, compatibility with electronics and the power consumption account for the contactor as well as the entire switching installation.Thanks to the comprehensive engineering know-how available in the company, the magnet systems of this contactor generation

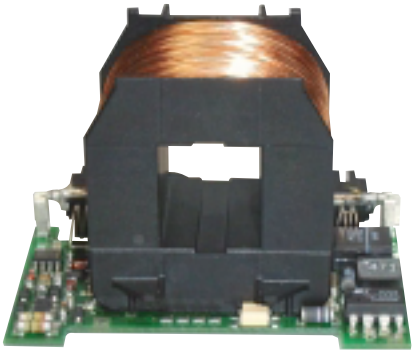

Figure 12: Printed circuit board for the electronic optimisation of drive consumption for the new DC contactor drives up to 150 A.

were again significantly improved in technical terms. At the same time, the economic benefit of the product system was increased. Building on years of experience with contactors for high and highest ratings, the new contactor sizes above 12 A were fitted with DC drives the power of which is electronically matched to the switching status as required (**Figure 12**). This technology prevents any power surplus that would reduce the service life due to contact bounce. At Moeller, this has become the proven top-class technology. This new solution being for the first time also used in the smaller ratings range, offers the following important benefits to the user:

- The contactors with DC drives and those with AC drives are now physically identical (**Figure 13**)
- This means a considerable reduction in the volume of the contactors and offers the option of integrating auxiliary contacts into the base units.
- It enables the same slim mounting widths as with the protective circuit-breakers
- The drive consumption and the ratio of switched rating to required auxiliary power has been significantly improved
- The heat rise is clearly reduced since
  - the DC sealing consumption for the contactor drives with rated currents between > 12 to 65 A or up to 30 kW uniformly amounts to no more than 0.5 Watt and
  - for all the contactor drives between 65 to 150 A rated current or up to 75 kW uniformly amounts to no more than 1.5 Watt (**Figure 14**),
  - this means that even the DC contactors can now be mounted directly adjacent to each other,
- The switching dynamics stay the same irrespective of the voltage range coils and the wide voltage tolerance range from 0.7 – 1.2 x U_e,

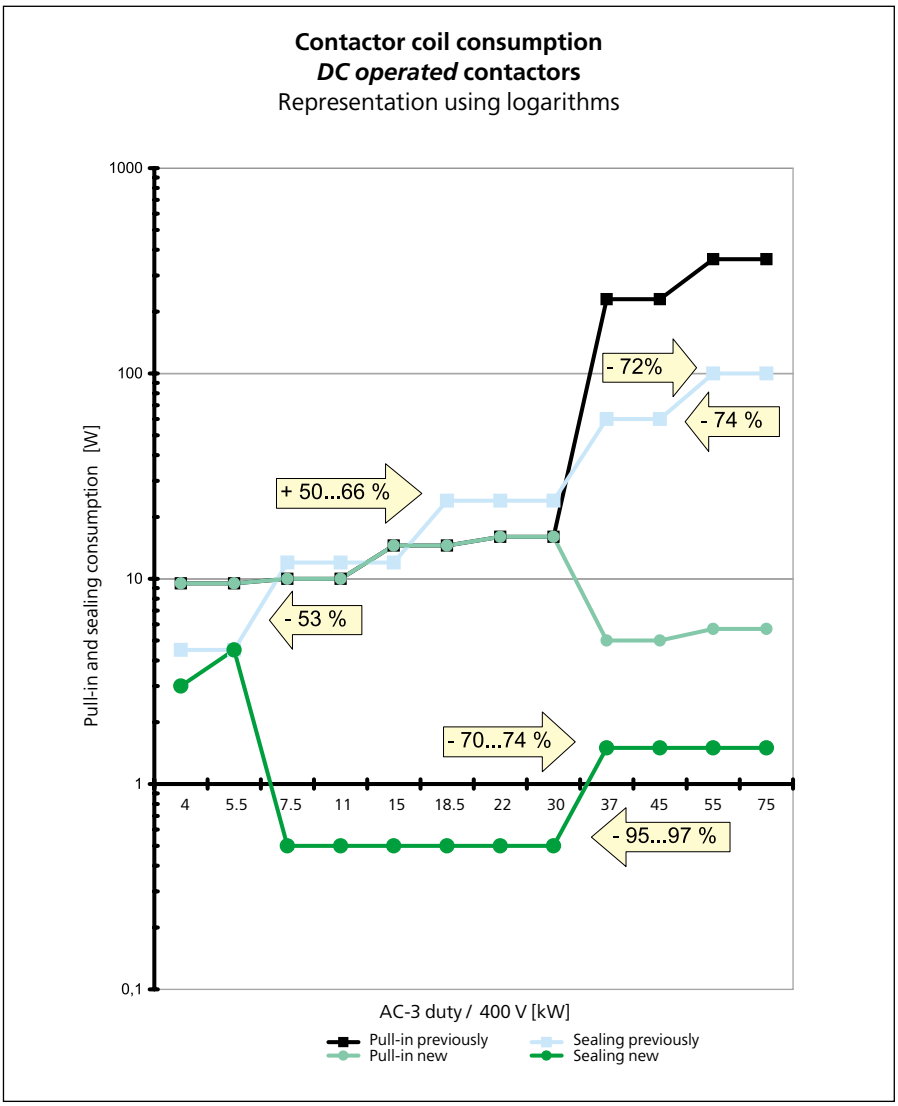

Figure 14: The electronic changeover has achieved quite considerable reductions in pull-in and sealing powers of DC contactors, which in turn has lead to the described technical and economic benefits.

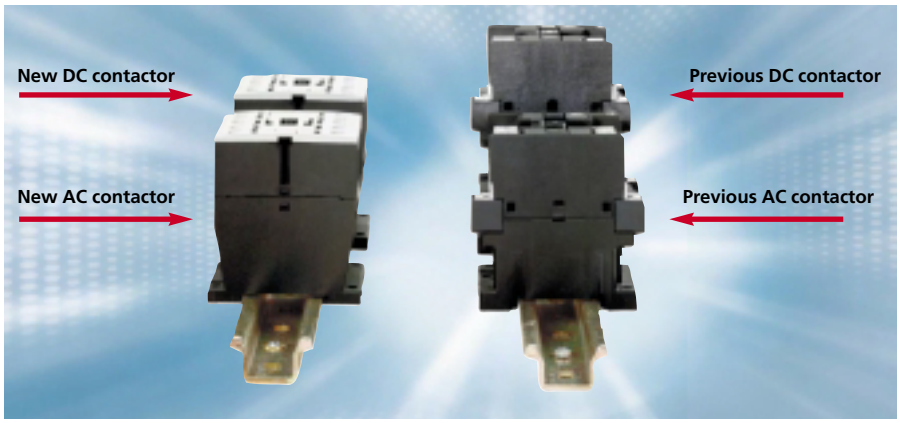

Figure 13: The new AC and DC contactors compared to the previous contactor generation. The reduction of the dimensions and at the same time, the considerable lowering of drive consumptions represent an important contribution to much more compact control systems.

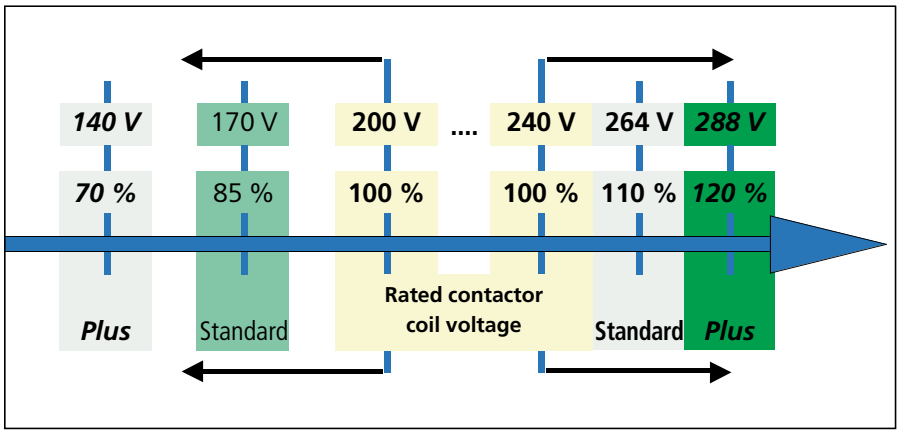

Figure 15: Illustration of the voltage tolerance of DC drives with voltage range coils in comparison with the specifications of Standard IEC / EN 60 947-4-1. The heightened under- and overvoltage protection (shown for example with control voltage 200 to 240 V DC) represents an important contribution to the operational reliability and fail safety of electrical switching installations that are combined with electronic control systems.

- Since all DC drives have built-in suppressor circuits and protection against polarity reversal, the associated handling costs are eliminated, ordering errors do not happen and devices are not damaged by reversed polarity.
- Where suppressor circuits are necessary for AC contactors, they can easily be plug-fitted.
- The drive voltage tolerance of the DC operated contactors (interface coils) is far beyond that specified by the Standard, and ensures excellent compatibility with electronics and the protection against under- and over-voltages relevant in practical engineering.
- Above 12 A of rated current, the DC voltage range coils help reduce the number of variants, because in each case the wide voltage tolerances extend the range both at the top and at the bottom (**Figure 15**).
- The voltage range coils also have a defined and constant closing threshold voltage that provides constant pull-in dynamics.
- DC operated contactors up to 32 A can be connected directly to many electronics systems cost-efficiently and in a space-saving manner without the need for coupling relays. The very large contactors up to the *DIL H2000* offer this benefit too by the way.
- The latest American market requirements of the semiconductor industry (SEMI F47 [4]) can be complied with extremely cost-efficiently and in a space-saving manner, since the bridging of voltage dips without the need for additional components as demanded in this directive, is achieved.
- Wiring work and voltage testing are facilitated by the uniformly front-accessible coil connections, either as screw terminals or as spring-loaded terminals.

Figure 16 shows that the pull-in and sealing consumption of most sizes of AC operated contactors has also been significantly reduced (note representation based on logarithms)

It is above all the pull-in consumption of the larger contactors that determines the size of the control transformers in switching installations. Where an installation contains many small and only a few large contactors, the control transformers are dimensioned

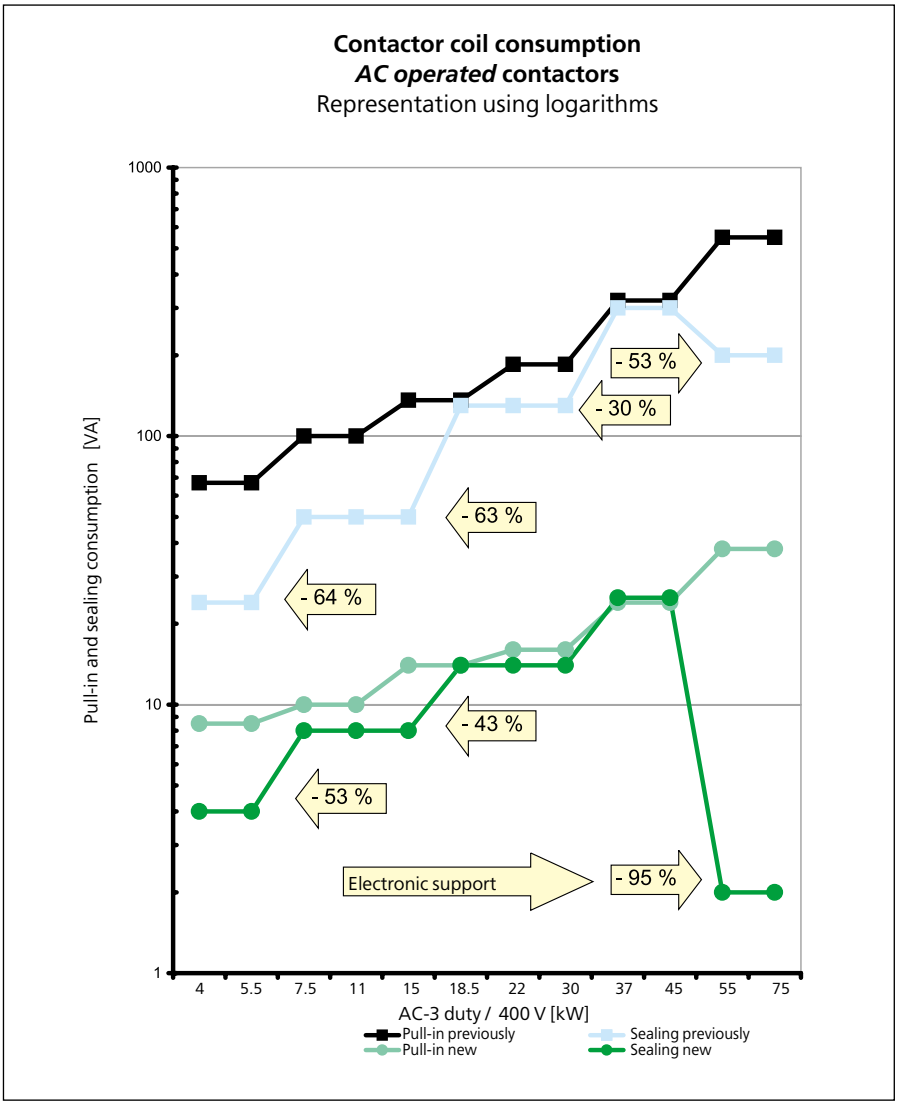

Figure 16: In some of the AC operated contactors with new drives, the pull-in consumption was clearly reduced

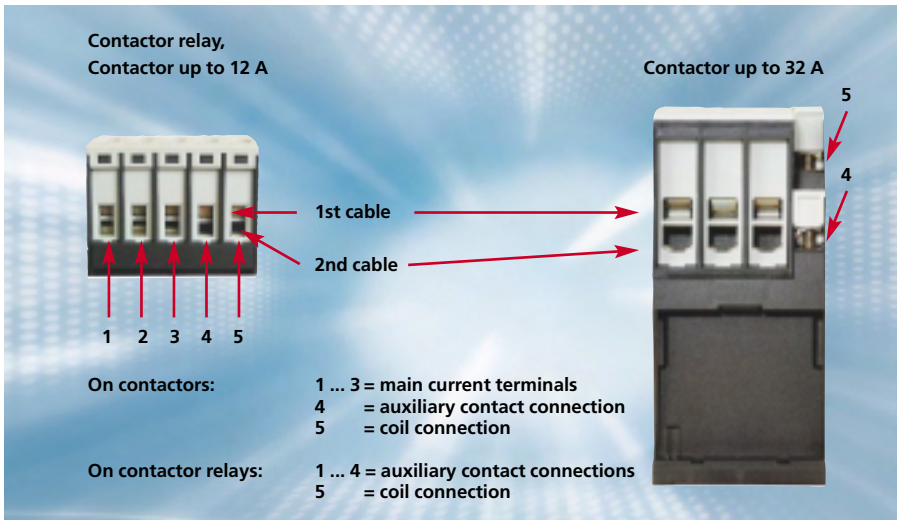

Figure 17: Optimum terminations. Having proved their worth with circuit-breakers, large motor-protective circuit-breakers and contactors for years, they are now also a feature with the smaller ratings: separate terminal chambers for two cables per connection in sturdy box terminals. The same termination technology for contactors up to 400 A.

according to the continuous rating. Where large contactors are in the majority, the transformer is selected according to its short-time rating, although the sealing consumption of all simultaneously closed contactors must not exceed its continuous rating [5].

Since AC and DC contactors are also used together, the fact that they are of identical physical size is of great advantage for the design engineer. The reduction in mounting depth of DC operated contactors by approximately 25 mm, is particularly advantageous when it comes to building them into small and non-standard enclosures. The reductions in width and matching of width to that of protective circuit-breakers, enables the layout within switching cabinets to be optimised. Motor-starters up to 15 kW now fit on to 45 mm wide busbar adapters. This is important since the useful width of busbar systems within every switching cabinet is limited.

Due to the simultaneous reduction in component width and in drive consumption, a compact control system now becomes a reality. The cost of sealing consumption can now be lowered in many cases due to fans being unnecessary and due to the smaller power supply units. In a MODAN drawer-type distribution section with 20 starters, for example, the sealing consumption of the contactor coils can be reduced from 300 W to 15 W. This saves approximately € 200 annually in power cost per section, as well as making a contribution to environmental protection. Equally, there are resulting cost savings on control transformers and switched-mode power supply units.

Our new interface drives represent particularly worthwhile solutions to problems with interfacing to electronic controls and sensors. The output voltage of electronics systems can fluctuate greatly due to the potentially large voltage drops at semiconductor end stages. The voltage limits for electronic control systems are defined in Standard IEC 61 131-2 [6]. Another critical factor at these interfaces is that the contactor coils must have the smallest possible sealing consumption, which then reduces the voltage drop via the semiconductor. The reduced heat loss favours the temperatur-sensitive electronics components.

The built-in suppressor circuit in DC contactors protects relays and semiconductor elements against damage from voltage peaks as can occur when inductive elements, i.e. contactor coils are switched Off. Suppressor circuits for AC contactors are selected only in cases where the application requires them, and they can easily be plugged in retrospectively at the front. To equip AC contactors with suppressor circuits across the board, would not be technically sensible or economically acceptable in every case.

The extensive voltage tolerances of the DC drives are of benefit also in applications where large voltage drops are due to long cables. DC operated contactors are generally to be preferred where long cables are involved, since they prevent a delay in de-energization of the contactor drives. Where AC voltages are used with long cables, the cable capacities may lead to delayed de-energization. In the worst-case scenario, an AC operated contactor at the end of several hundred metres of cable may not drop out at all. The voltage tolerances are also beneficial where DC voltage is obtained from batteries, because considerable voltage excess is involved in the charging of batteries.

Connections made to measure

Every switchgear client first looks at the termination technology. Our solution allows wiring errors to be prevented, terminal heating to be excluded and, last not least, money to be saved due to shorter wiring times. **Figure 17** shows a view of the terminations and the direction of incoming cables. There is no screw in the way of the cable in the box terminal connection chamber. Box terminals having two separate chambers ensure the necessary connecting force over their entire lifespan, to cope even with cables differing from one another by several

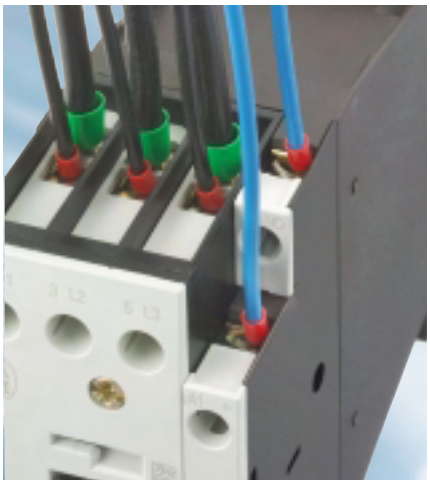

Figure 18: The coil connections now are located at the contactor front. They are therefore no longer obstructed by the often immovable main current wiring, making wiring and voltage testing easier and less time-consuming. The terminals for the built-in auxiliary contact module are located at the second level.

cross-sections sizes. This reliable connection technology is now available throughout on all contactors up to 400 A, large motor-protective circuit-breakers and on many circuit-breakers. Since in switching installations it is normally the main current wiring with often large and inflexible cross-sections that is wired first, the frontal coil connections (**Figure 18**) play an important role in the rationality of wiring and the ease of testing it. As described, an alternative solution is available for all auxiliary connections and for the main current connections up to 12 A in the screwless spring-loaded terminals that, of course, also offer two separate apertures for 2 cables each. But this is not all we offer. We devote an entire paragraph later on to the additional terminals for our new Kombi plug-in technology.

Small but very useful

For a control task, sometimes one needs more than one contactor. For reversing and star-delta combinations several contactors are combined. The small *DILM(32)150-XVB* links mechanically connect them into a single unit. This assembly work can be carried out and prewired outside the switching cabinet. Ideally, the new plug-fit wiring bridges from the Kombi plug-in technology can be used, or such combinations can be obtained ready for connection directly from Moeller. Small, but effective also, is the mechanical interlock that securely prevents two contactors within a combination from ever closing simultaneously, be it through an electrical fault or due to mechanical shock. The mechanical interlock now consists merely of a small sphere that is inserted between the two contactors (> 12 A) using a ball dispenser. Then the contactors are assembled using the mechanical links described. This very simple solution does away with the need to leave space between the contactors. It saves 15 mm in width, which is particularly valuable when using reversing starters on busbar adapters. There is no need for an extra wide adapter to achieve the increased functional reliability. After all, this cost-efficient solution saves 16 % of precious width with 45 mm wide contactors. On contactors up to 12 A, an anchor-shaped plastic part is used at the same interface point, also without additional space requirement. Parallel switching bridges for AC-1 applications enable the current carrying capacity of the contactors to be increased by a factor of 2.5 to 3 for switching single-phase loads, at minimal expense. Simple are also the time-saving star-point bridges.

Universal switching and protection using *PKZM*

The *PKZM* motor-protective circuit-breakers are among the most versatile switching and protective devices. They are complete motor-starters in themselves. The *PKZM* motor-protective circuit-breaker is the first choice for many applications not requiring frequent or remote switching.
It combines the following universal functions in the smallest of spaces:

- manual operational switching,
- occasional remote tripping,
- clear indication of the switch position,
- inherent short-circuit protection over wide ranges up to 150 kA (**Table 5**),
- application oriented inherent short-circuit protection at larger current ratings up to 50 kA at 400 V or group protection for several breakers,
- usable up to 690 V,

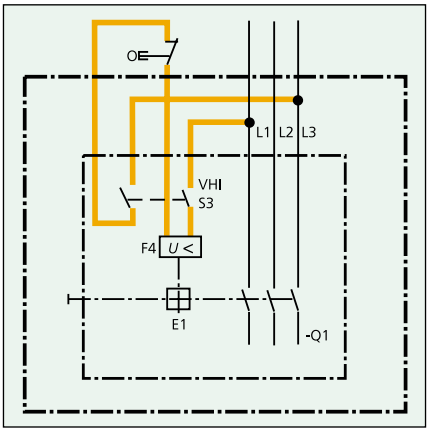

Figure 19: On circuit-breakers and motor-protective circuit-breakers, early-make auxiliary contacts isolate the Emergency-Stop circuits of the undervoltage trips from the mains supply. This solution is to be selected where the Emergency-Stop circuit is spatially extensive and, on occasion, external to the switching cabinet. A circuit-breaker with undervoltage trip can be switched On only provided voltage is flowing at the release. The auxiliary contact therefore, must close before the main contacts.

- personnel protection through all-pole de-energization and quick tripping,
- simultaneous short-circuit protection for cables and electrical equipment,
- overload protection for cables and electrical equipment,
- for all current ratings up to 65 A, i.e. suitable for 90 % of all motors,
- optimised for motor protection or transformer protection,
- suitable for switching and protection also of resistive loads through phase-failure sensitivity,
- suitable for the protection of EEx e motors, approval to the ATEX 100a [7] directive (for *PKZM 0* and *PKZM 4*),
- short recovery time after fault removal,
- suitable for world markets, with all the necessary approvals and acceptances,
- Optionally
  - mounting and encapsulation with high degree of protection,
  - protection by untervoltage trips against automatic restart,
  - use as main switch or Emergency-Stop switch in the main circuit,
  - isolation of the Emergency-Stop control circuit by early-make auxiliary contacts (**Figure 19**),
  - versatile lockability,
  - multiple, differentiated status indication, even including a networkable solution,
  - comprehensive accessories.

The *PKZM* from Moeller is synonymous in the market with the term motor-protective circuit-breaker.
Nothing much needed to be improved on it. It has proved its worth in its millions. But the old favourite is now making its come-back since, for many applications, directly on simple machines the pushbutton operation is ergonomically the best (**Figure 20**). In an emergency, it can be simply 'knocked out'. Customers demand the push actuation. They do not regard the toggle or rocker actuation on competitor products as equivalent.
In addition to the rotary operation, Moeller is therefore bringing back the classical push actuation in the shape of the *PKZM 01* for currents up to 16 A. Complete with mushroom button for Emergency-Stop actuation on simple machines. Either open in the surface mounting insulated enclosure with high degree of protection, or with the

Figure 20: Ergonomics at the machine. The classical PKZM 01 motor-protective circuit-breaker makes a come-back due to customer demand. Operators of simple machines want the pushbutton operation instead of the toggle or rocker.

Figure 22: Inside the switching cabinet, the motor-protective circuit-breaker with rotary drive is most suitable. The PKZM 0 is now available for currents up to 32 A. The small motor-protective circuit-breakers with rotary drives are also available as PKZM 0-T transformer-protective switches with higher short-circuit tripping values. The PKZM 4 setting ranges now cover up to 65 A.

proven flush mounting plate for mounting directly in the machine or instrument enclosure (**Figure 21**). The open-type circuit-breaker is padlockable in the Off position. Enclosed breakers can be locked off using the padlocking feature and several locks.

The circuit-breaker with rotary drive is the correct internal solution for the switching cabinet (**Figure 22**). For this application, the rating increase to 32 A on the *PKZM 0* is the most interesting innovation. In the protection of 15 kW motors, the expansion of the setting brings a clear reduction in volume together with a very favourable price. Motor-protective circuit-breakers are often combined with contactors. Now all the motor-starters up to 15 kW at 400 V fit onto 45 mm wide busbar adapters. In other words, all the motor sizes whose switchgear and controlgear is usually mounted side-by-side inside the switching cabinet. But the reduction in width is also of great benefit for top-hat rail mounting where it results in a clear, space-saving switching cabinet layout. In the electrical equipment for smaller current ratings, motor-protective circuit-breakers *PKZM 0* and *PKZM 01* are also used as main switches to IEC / EN 60 204-1[8] or as Emergency-Stop switches in the main circuit. These applications are increasing in number due to the modern trend towards decentralisation. Lockable door-coupling rotary handles are offered in the specified colours together with door interlocks. Shaft extensions with centring guides are available for adaptation to different enclosure depths.

Figure 21: Fitted into surface mounting enclosure, with or without mushroom-head for Emergency-Stop. Or PKZM 01 fitted with the flush mounting plate, directly into the machine enclosure.

The *PKZM 4* now protects motors up to 65 A.The corresponding contactors, DIL M65, with 55 mm width, measure the same as the circuit-breakers, i.e. a good 20% less than before. The highly compact *NZM 1* and *NZM 2* circuit-breakers protect the larger contactors up to the *DIL M150* and their electrical equipment. The *NZM 1* setting range for motor protection covers up to 100 A, and like the contactors, the component is only 90 mm wide.

The new xStart range too, offers for all the PKZ frame sizes the versatile and approved accessories that ensure safe and rational control panel building (**Figure 23**). For most applications, auxiliary contact modules with differing contact configurations are required for interlocking or for signalling. The main accessories are:

- Standard auxiliary contact modules for side mounting,
- Standard auxiliary contact modules for front mounting,
- Early-make auxiliary contact modules for remote-control Emergency-Stop circuits,
- Trip-indicators for differential fault indication,
- Undervoltage or shunt release,
- Feeder terminal blocks for larger cable cross-sections or for UL 508 Type E and UL 508 Type F motor-starters for use in North America [9],
- For rational panel building, there are top-hat rail adapters available, and the popular three-phase commoning links in many different versions for the joint supply of several circuit-breakers.

Fuseless, means no problems with export

Fuseless motor-starters offer better personnel protection and facilitate the export of machines and electrical system equipment:

- The increase in short-circuit breaking capacity shown in **Table 5**, does away with the previous requirement in extensive applications for group

Excerpt from the System

View without *PKZM 4* and contactors up to 150 A. For the complete range, see the current Main Catalogue.
Auxiliary and main current connections up to 12 A, either with screw terminals or spring-loaded terminals.

Contactors

1 Contactor up to 12 A
2 Contactor up to 32 A
3 Suppressor circuit
4 Top-mounted auxiliary contact
5 Contactor up to 65 A
6 Side-mounted auxiliary contact
7 Top-mounted auxiliary contact

Overload Relays

8 Overload relay up to 65 A
9 Overload relay up to 32 A
10 For Separate mounting

Motor-Protective Circuit-Breakers

11 Motor-protective Circuit-breaker with rotary actuation
12 Motor-protective Circuit-Breaker with pushbutton actuation
13 Current limiter module
14 Shunt- and undervoltage releases
15 Trip-indicating auxiliary contact
16 Side-mounted auxiliary contact
17 Front auxiliary contact
18 Early-make auxiliary contact
19 Door-coupling rotary handle and extension shaft
20 Early-make auxiliary contact
21 Insulated flush mounting enclosure
22 Insulated surface mounting enclosure with Emergency-Stop pushbutton

Starters

23 Electrical link
24 Mechanical link
25 Combination plug-in connector
26 Motor-starter with combination plug-in technology
27 Busbar adapter
28 Top-hat rail adapter

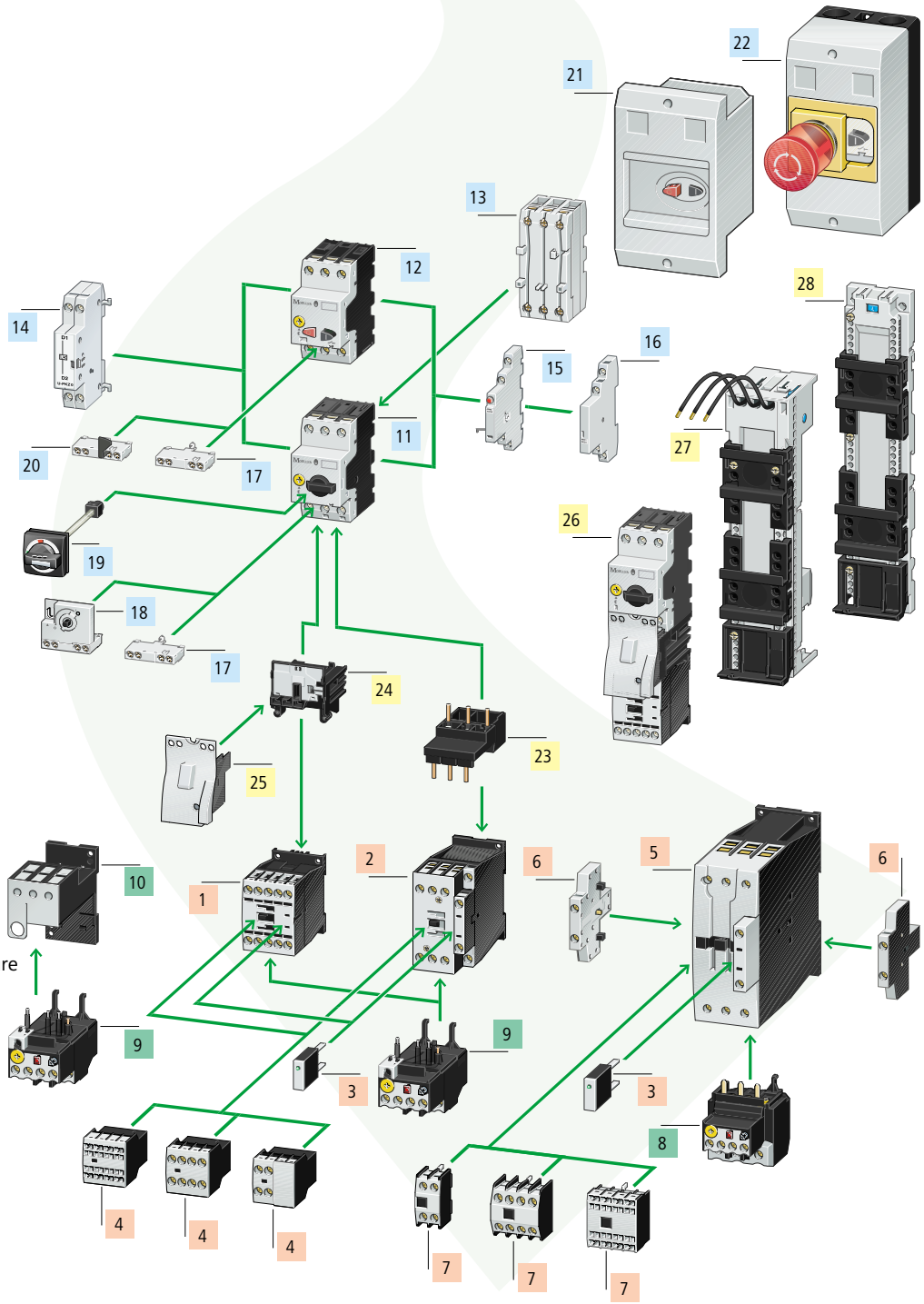

Figure 23: This diagrammatic representation shows the main components of the xStart product system and how they fit together.

protection elements or *CL-PKZM 0* current limiters.

- Considering the multiplicity in the USA and Canada of regionally differing fuse installations, it is often difficult for non-American machine and system builders to find out what fusing system the end customer needs, particularly as he and his location may not be known at the time the project is planned.
- Irrespective of locally customary fusing systems, fuseless starters remove the spare parts logistics problems.
- Switching installations become more compact. Since the fuse bases, particularly for North American fuses, are very large and take up much space in the control system, their proportions compare unfavourably to the increasingly smaller dimensions of contactors and motor-protective relays.
- Fewer individual components need to be mounted and wired – a great cost saving.
- In other words, the components described enable the construction to the latest directives, of compact, fuseless *Ul 508Type E* and *Ul 508 Type F* motor-starters [9] for the North American market.
- These compact starters make it possible to engineer and construct 'world market switching cabinets' to a uniform layout.

Motor protection made to measure

Despite the great benefits of fuseless installations, there are still applications for fuses. Particularly, where high operational voltages are involved and more stringent demands for resistance to welding, the use of fuses is in fact to be recommended. When protecting motors by means of fuses, there is always the need for an additional motor-protective relay. Z motor-protective relays in approved version, and with ATEX 100a approval for the protection of EEx e motors, are part of the xStart product system described. Due to the changes in contactor dimensions and current ratings, the range of motor-protective relays too has been adapted. The new *ZB12* and *ZB32* for example, cover the entire rating range up to 32 A, with various setting ranges. For every *xStart* contactor, there are suitable motor-protective relays available, with phase-failure sensitivity, for direct fitting or as separate components. For close connection to the contactor and straightforward common wiring, the contactor terminal 14 is repeated on the motor-protective relay. The coil connection of contactors up to 12 A is also repeated for the same reason. The links between motor-protective relay and contactors plug in, and the components are mechanically latched with one another. Whether with or without fuses, using the *EMT 6* thermistor machine-protective relay, motor protection can be easily upgraded to full motor protection [10]. Motors in their basic form are increasingly being fitted with integral thermistor sensors for direct temperature monitoring within the motor, and thus even better failure prevention.

Systematic connection = Kombi plug-in connection

Manual work represents a potential weakness in a control system. It is also highly expensive. The time taken is difficult to calculate and often there are bottlenecks regarding qualified personnel. Where manual work is done under time pressure, errors creep in easily. All these are reasons for seeking practical compromise solutions between manual fitting and automation. There are many repetitive actions involved in control system building. This is where the idea of the Kombi (combination) plug-in technology comes in: on each motor-starter, the connection must be

	230 V				400 V				440 V				500 V				690 V			
I_u	I_q	I_{cu}	I_{cs}	Fuse	I_q	I_{cu}	I_{cs}	Fuse	I_q	I_{cu}	I_{cs}	Fuse	I_q	I_{cu}	I_{cs}	Fuse	I_q	I_{cu}	I_{cs}	Fuse
A	kA	kA	kA	A	kA	kA	kA	A	kA	kA	kA	A	kA	kA	kA	A	kA	kA	kA	A
0.16	150	150	150	N	150	150	150	N	100	100	100	N	100	100	100	N	100	100	100	N
0.25	150	150	150	N	150	150	150	N	100	100	100	N	100	100	100	N	100	100	100	N
0.4	150	150	150	N	150	150	150	N	100	100	100	N	100	100	100	N	5	5	5	50
0.63	150	150	150	N	150	150	150	N	100	100	100	N	100	100	100	N	3	3	3	50
1	150	150	150	N	150	150	150	N	100	100	100	N	100	100	100	N	3	3	2	50
1.6	150	150	150	N	150	150	150	N	100	100	100	N	100	100	100	N	3	3	2	50
2.5	150	150	150	N	150	150	150	N	100	100	100	N	100	100	100	N	3	3	2	50
4	150	150	150	N	150	150	150	N	100	100	100	N	100	100	100	N	3	3	2	50
6.3	150	150	150	N	150	150	150	N	100	100	100	N	42	42	6	50	3	3	2	50
10	150	150	150	N	150	150	150	N	42	42	10	50	42	42	6	50	3	3	2	50
12	50	50	10	50	50	50	10	50	15	15	10	50	15	15	15	50	3	3	2	50
16	50	50	10	50	50	50	10	50	15	15	10	50	15	15	15	50	3	3	2	50
20	50	50	10	50	50	50	10	50	10	10	10	50	6	6	6	50	3	3	2	50
25	50	50	10	50	50	50	10	50	10	10	10	50	6	6	6	50	3	3	2	50
32	50	50	10	50	50	50	10	50	10	10	10	50	6	6	6	50	3	3	2	50

Table 5: The areas with green background denote the inherently short-circuit proof ranges of the PKZM 01 and PKZM 0 motor-protective circuit-breakers. The short-circuit rating was increased from 100 to 150 kA. No additional protective elements are required for the green areas. For the other ratings, group protection, circuit-breakers or the proven CL-PKZM 0 [13] current limiters can be used to increase the switching capacity.

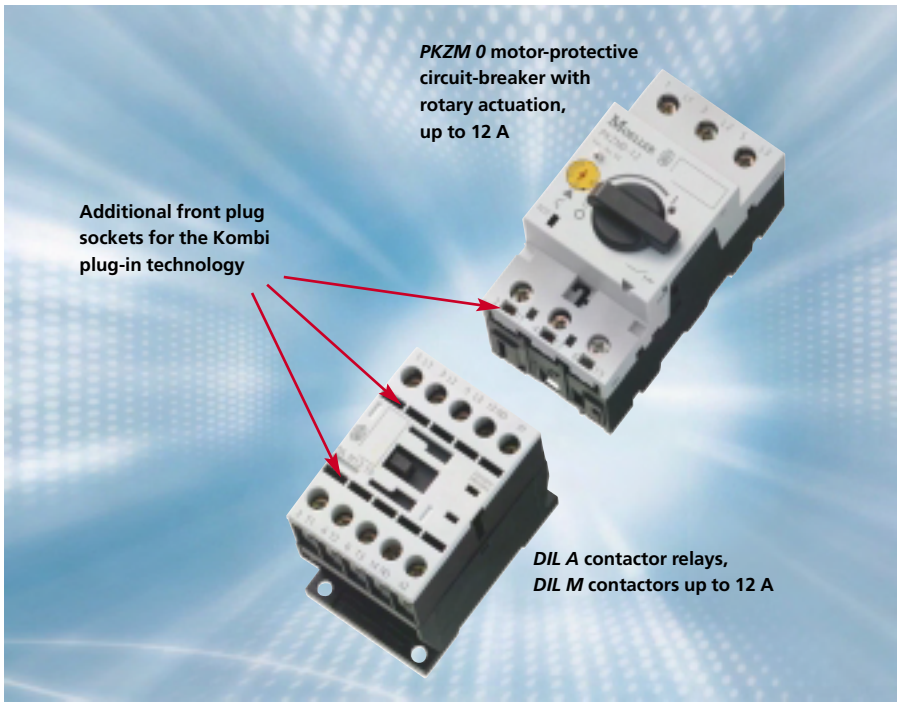

Figure 24: Connections for the Kombi plug-in technology on PKZM 0 motor-protective circuit-breakers with rotary actuation, for currents up to 12 A, as well as on DIL A contactor relays and DIL M contactors up to 12 A

made between motor-protective circuit-breaker and contactor.
On reversing starters, the reversing wiring must be put in place. Where these links are made using wires, the regulations covering operating media specify in many cases that both ends of the connection must be labelled, not to mention the ferrules. This is stupid work, on which expensive specialist personnel is wasted.

Up to 12 A, *PKZM 0* motor-protective circuit-breakers with rotary actuation, and contactors in the xStart system generally have additional oblong plug sockets on the front (**Figure 24**). 12 A at 400 V equates roughly to 5.5 kW, a rating that is higher than that of most motors in today's automation technology. On the contactors, even the built-in auxiliary contact modules and coil connections are equipped with the plug connections. Here for example, the reversing interlock in the control circuit is simply plugged in. High-quality springy plug-in lugs ensure reliable electrical connection. The plug connectors reliably cope with the entire current and voltage spectrum, from control circuit connections in the mA range with low control voltages up to motor currents of 12 A and voltages up to 690 V. The plug-in technology described was developed jointly with the world market leader in electrical plug connectors. **Figure 25** shows the Kombi plug-in technology by the example of a direct-on-line starter up to 12 A. Mechanical plug modules connect motor-protective circuit-breakers and contactors to produce stable assemblies that can be securely snap-fitted on to just one top-hat rail. When the plug connector is pulled out, there remains a visible isolating gap. Further, most interesting components are in the development stage. The contactor apertures for the Kombi plug connectors, as shown in **Figure 26**, are also suitable for accepting reversing- or star-delta bridges. The Kombi plug-in technology opens up totally new spheres of application in the future. It will be possible for example, to simply plug printed circuit boards, with direct contact to the main current terminals and the contactor coil connections, on to contactors or reversing contactor combinations (**Figure 27**)

The customer can equip these pcb's himself with electronic components for add-on functions such as delay circuits, pulse circuits or his own specific networking functions (motto: printable contactor combinations). Modular components are fitted on to the

Figure 25: Direct-on-line starter in Kombi plug-in technology with the advantages of secure fixing on just one carrier rail and positive and error-free connection between motor-protective circuit-breaker and contactor.

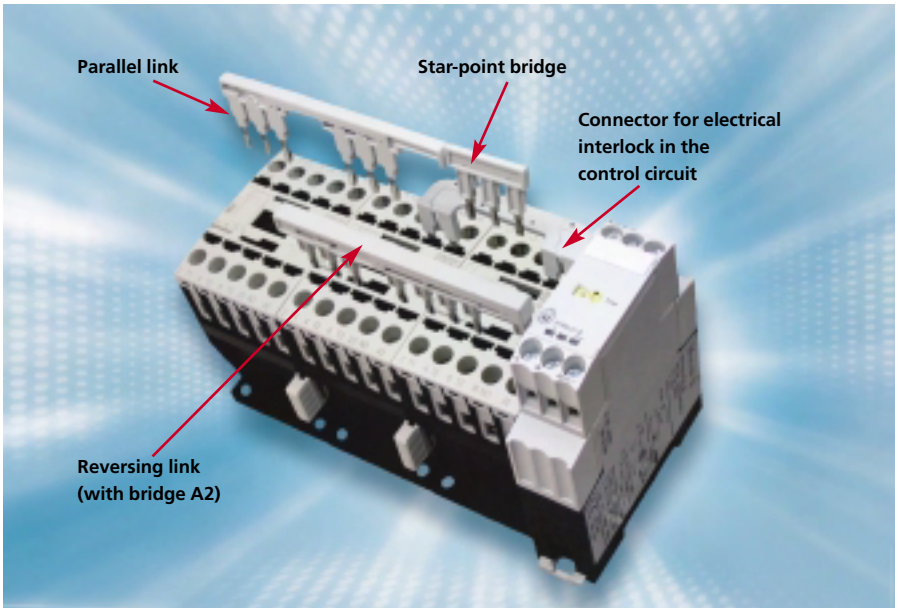

Figure 26: Kombi plug-in technology with plug-in main current and control current connections for quick and error-free wiring, shown on a star-delta starter for example.

contactors (**Figure 28**), which also have plug connections to the contactor coils. The enclosures can accept additional function blocks. Presently in development are for example electronic timing relays, thermistor evaluation or networking circuits for various different bus protocols. In addition, it will be possible for feedback to be monitored via auxiliary contact modules, or to build in especially dust-proofed, highly fail-safe auxiliary contacts for extra low currents and voltages.

The system allows a flexible modularity while offering a dependable fixed mounting dimension.
It reduces costs for fitting and testing, and it increases the serviceability of installations by rapid exchange of components. The Kombi plug-in technology, what is more, does not limit the ways in which components have been customarily handled/ processed. By using the Kombi plug-in technology, you are not using special products, but standard products. The system interfaces on contactors and motor-protective circuit-breakers cost the same. New costs only arise from using the plug connectors. But these costs are more than compensated for by the systematic savings described.

All in a row

Busbars are needed in almost every switching cabinet for the distribution of power between incomers and outgoers. In the past, this need was usually met by using the space in the cabinet much more inefficiently than today. In the past, busbars were often fitted with fuse outgoers, whereas today the space needed for power distribution is simultaneously used for simple mechanical stopping and for contacting of motor-starters. Busbar adapters contribute significantly to the rational construction of switching cabinets. The busbar adapters can be conveniently fitted with circuit-breakers and contactors before being installed in the switching cabinet. The almost completely prewired motor-starters are simply snap-fitted on to the busbar. A distance of 60 mm between busbar centres is now widely established, the alternative being 40 mm between busbar centres. Nowadays, more busbar systems than are needed merely for power distribution are frequently installed in a cabinet, and increasingly these are vertical busbar systems.

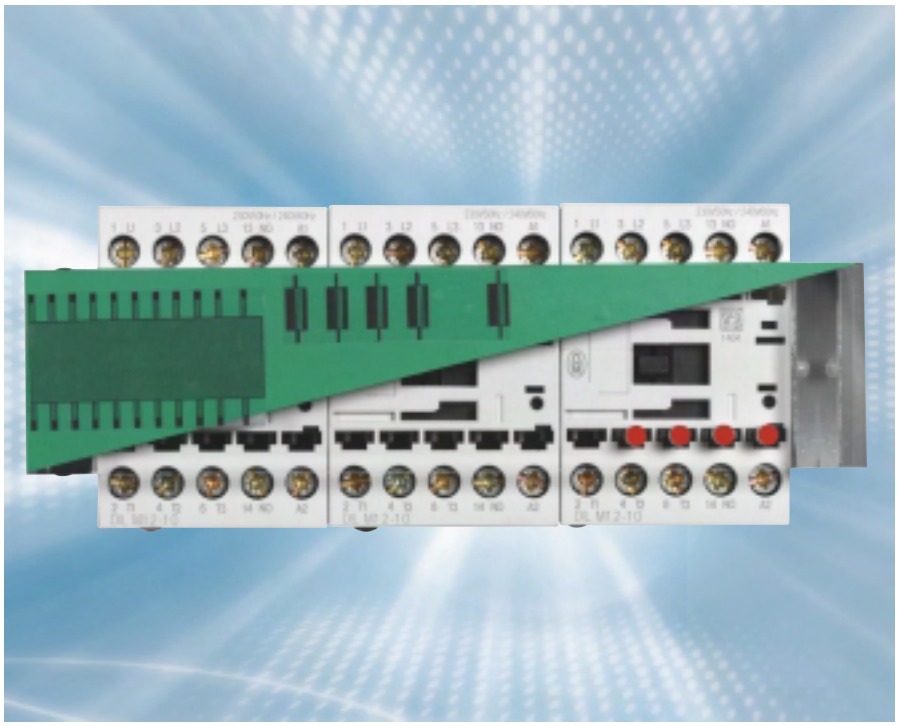

Figure 27: The Kombi plug-in technology enables pcb's to be plugged on to switchgear to connect directly with the terminals. The user can design the layout of and equip the printed circuit board as required.

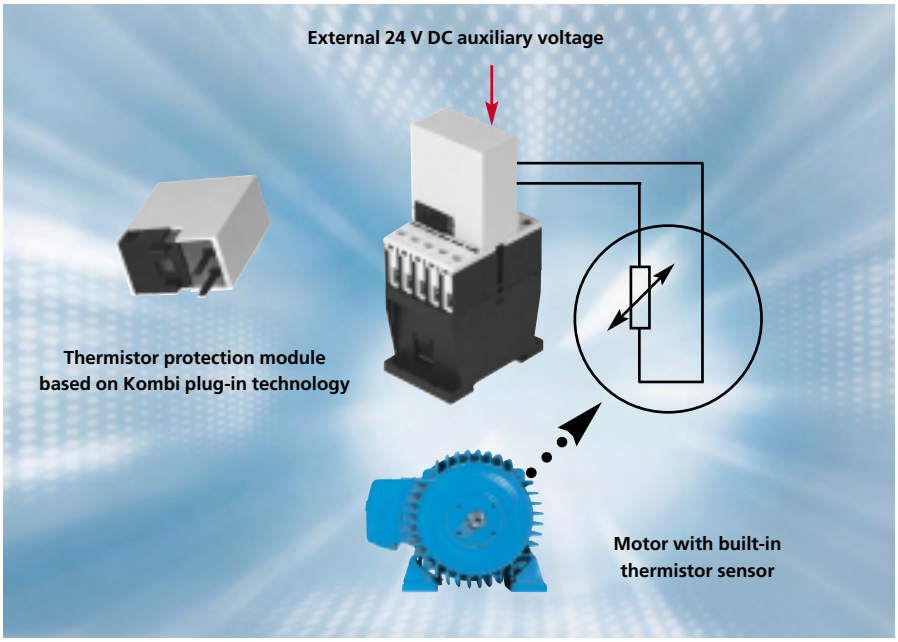

Figure 28: An enclosure that can be plugged on to the contactor and is mechanically linked with it, can accommodate standard circuits from the catalogue or customised circuits. These (e.g. electronic timing relays) then contact the coil connections directly and enable feedback signals from the switchgear to be monitored if required.

The greater busbar length is even more economical to use, and is particularly practical where many low-rated individual starters must be installed and wired. And, of course, the majority of electric motors have ratings below 4 kW.

The busbars can be used even more efficiently since all direct-on-line starters up to 15 kW / 400 V fit on to 45 mm wide adapters. A 15 kW reversing starter is mounted on a width of only 90 mm. The length of the switchgear combination of motor-starters and contactors approximately corresponds to the height of the busbar system. Adapters of double width accommodate the switchgear of reversing starters and in addition offer space for supplementary relays.

New busbar adapters (**Figure 29**) that are optimally compatible with the busbar systems and system accessories of busbar market leader, Wöhner, complement the xStart system. The Standard ensures that busbar adapters for 60 mm between busbar centres from all the manufacturers fit onto such systems. The benefit for logistics operations is that busbar material is available the world over as Standard-compliant copper profile.

Prepared connectors are available for linking circuit-breakers and contactors, or there is the new Kombi plug-in technology. For a regular requirement of large volumes, Moeller can supply the adapters ready fitted with the switchgear for direct-on-line and reversing starters. Ready-for-connection wiring of main current and control current connectors is also possible. The motor cable in such cases, is taken directly up to the plug connector on the busbar adapter. Such combinations are not listed in the catalogue, but can be made available if you speak to your contact at *Moeller*.

Efficient transport prevents losses

The manufacturers of volume machinery or quantity applications often require certain switchgear in large quantities to ensure processing continuity. Volume packaging offers handling benefits here, because there is no need to open lots of individual packs and then dispose of them. Please contact *Moeller* if you are interested in this type of despatch (this applies to quantities of about 100 identical products, but depends also on how many devices fit into a transport container).

A look into the future

The product system described is going to be further developed into the future. A series of special capacitor contactors for group compensation is planned for example. In the switching of capacitors, there are distinctly differing applications:

- individual power factor compensation (PFC)
- group PFC with choke coil
- group PFC without choke coil

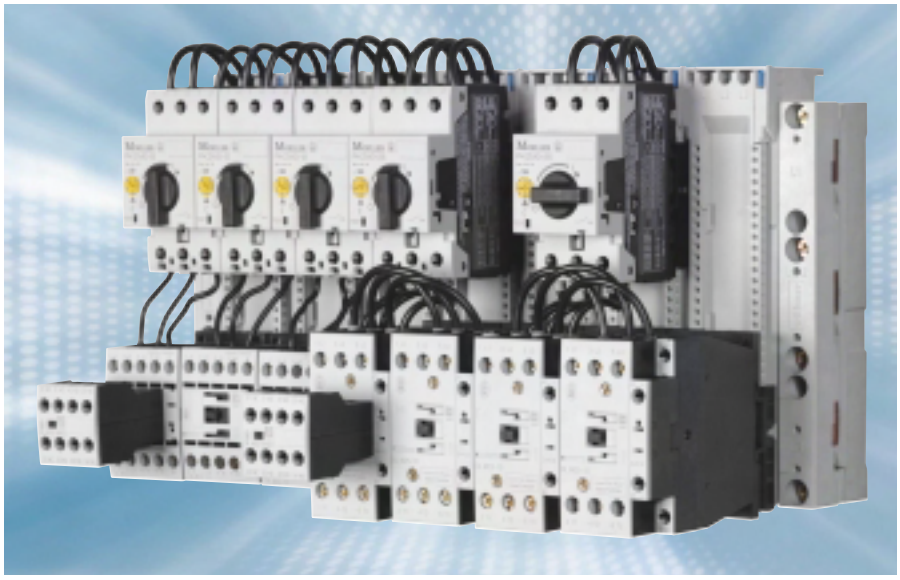

Figure 29: Motor-starters on new busbar adapters are available for rational control panel and distribution board building by rapid fitting.

These applications also make differing demands on the contactors used. In PFC and PFC with choke coil, contactors must be able to control capacitor starting currents that can amount to up to 30 times the capacitor rated current. PFC with choke coil are used in networks in which, for example, frequency inverters provide for non-sinusoidal currents having a high harmonic content. The chokes limit the inrush current peaks to an acceptable level. In these two types of compensation, the contactors from the *xStart* system described are successfully used for capacitor control. There is an increasing trend towards PFC with choke coil.

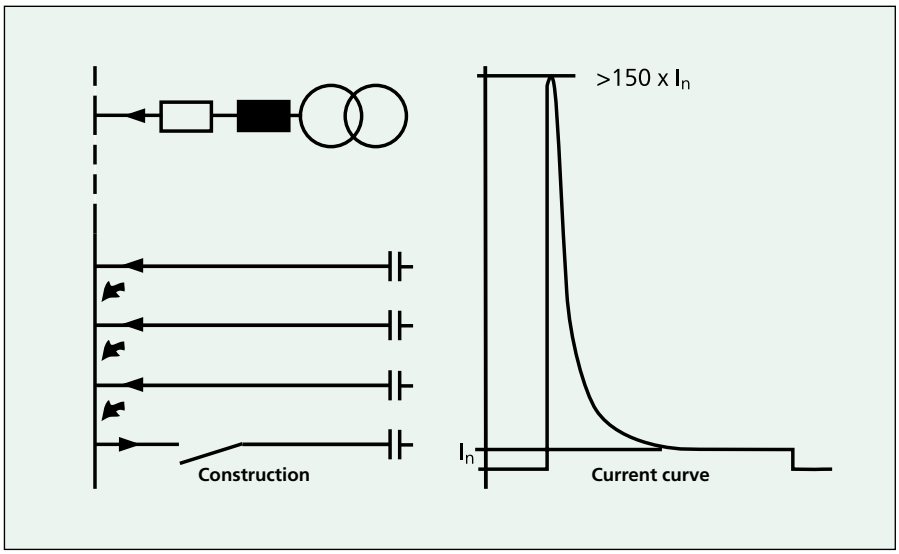

Figure 30: Various duties for switching and protective devices, cables and conductors, as well as for the capacitors themselves, as a function of the type of compensation system.

The requirements of contactors for the less inductive, PFC without choke coil are much more demanding. The load currents of the capacitors here are not merely drawn from the network comprising inductivities, e.g. from transformers and cables, but in addition directly and particularly non-inductively from the already charged capacitors of the special capacitor battery (**Figure 30**).

Within a few milliseconds, inrush current peaks of 180 to 200 times the capacitor current can arise here. Special capacitor contactors [11] are required for this purpose. These capacitor contactors have two circuits switched in parallel. One of these circuits is made up of early-make auxiliary contact modules that initiate a pre-loading of the capacitors via low resistances or inductivities. The main contacts of the same contactor close a few milliseconds later. They form the second circuit that carries the continuous capacitor current. Another improvement on the existing solution lies in that the new generation of components ensures that the auxiliary contact module (first circuit) is no longer involved in the de-energization of the capacitors.

This reliably prevents the thermal overloading (possible in exceptional cases) of the auxiliary contacts and current limiting resistors. The new *DIL K* series of capacitor contactors will be available for all the various capacitor sizes.
At present, there is a 4-pole contactor, *DIL MP20*, for a 4-pole continuous thermal current of 20 A. Other contactors for 32, 45, 63, 90 and 125 A are to follow. These contactors are used for the electrical isolation of devices with power electronics, for switching of various heating loads, filament lamp lighting and other loads in utilization category AC-1. Where only single-phase switching is required, several main contacts can be switched in parallel using the *DIL M ..-XP1* parallel link sets to increase the current. By parallel connection of three contacts of a *DIL ..M,* the admissible current rises by factor 2.5, and with four contacts of a *DIL ..MP* in parallel, the current rises by factor 3.

Summary

Having in the past four years renewed all the *DIL M* contactors in the upper rating range, the *DS* contactors and all the *NZM* and *IZM* circuit-breakers, Moeller now offers a new and versatile product system also in the lower rating range up to150 A. Where it is physically possible, uniform accessories are used for the whole range. The new products were developed in close cooperation with German and international customers from various different branches of trade and industry, under the motto: From practical application for practical application. A particularly favourable cost/benefit ratio in the result of the development positively influences the economics along the whole value creation chain. This was achieved also by trimming the number of necessary components and by drastic reductions in volumes and heat losses. The range described will also make possible further interesting additions to the system in the next two years. Taken together with the equally new *RMQ-Titan* command and signalling devices, the *LS Titan* position switches and the market hit, the easy control relay, as well as the *MFD* inputting and visualising devices, *Moeller* is offering to the trade, switchgear system builders, and machine and system equipment builders a state-of-the-art, as well as economical low-voltage switchgear programme.

This year, the switchgear will be complemented by the new *xEnergy* switching cabinet system. In other words, this is a rounded, range of mutually compatible devices, from one suppier, for the power distribution and control system market.

The handling/processing advantages of the xStart system are dealt with in detail in article [14].

Validity

This article represents the status of development and international directives as at April 2004. Changes may occur. The most up-to-date statements of fact are always to be found in the current catalogues of the *Moeller GmbH, Bonn*. Here you will also find detailed data regarding motor-starters for various types of coordination and voltages to IEC/EN 60 947-4-1 [12]. Approvals and acceptances had been sought when this article went into print.

Literature:

*[1] DIN EN 50 005, "Industrial Low-Voltage Switchgear, Terminal Markings and Conventional Numbers, General Rules"

*[2] DIN EN 50 011, "Industrial Low-Voltage Switchgear, Terminal Markings, Conventional Numbers and Code Letters for Certain Contactor Relays"

*[3] DIN EN 50 012 "Industrial Low-Voltage Switchgear, Terminal Markings and Conventional Numbers for Auxiliary Contacts of Certain Contactors", 1978

[4] SEMI F47-0999 „Provisional Specification for Semiconductor Processing Equipment SAG Immunity"

*[5] Wolfgang Esser "Control, Isolating and Safety Transformers", TI 39-013, Moeller GmbH, 1998

*[6] IEC / DIN EN 61 131-2, VDE 0411 Part 500 "Programmable Logic Controls, Part 2: Requirements for Operating Media and Testing"

*[7] ATEX 100a, Directive 94/9/EG, v. 23.3.94, for the harmonization of legal prescriptions in member states affecting devices and protective/safety systems for the regulated use in potentially explosive areas, ABI. L 100 dated 19.4.1994

*[8] DIN EN 60 204-1*VDE 0113 Part1, 1998-11-00 DIN IEC 60204-1*VDE 0113 Part1, Draft 2002-09-00 "Safety of Machines – Electrical Equipment of Machines – Part 1: General Rules"

[9] Wolfgang Esser, „Besondere Bedingungen für den Einsatz von Motorschutzschaltern und Motorstartern in Nordamerika", VER1210+1280-928D, Moeller GmbH, Bonn, 2003

"Special consideration governing the application of Manual Motor Controllers and Motor Starters in North America", VER1210+1280-928GB, Moeller GmbH, Bonn, 2003, or in the Internet: deutsch: http://www.moeller.net/binary/ver_motorstarterna_de.pdf, English: http://www.moeller.net/binary/ver_motorstarterna_en.pdf

*[10] Wolfgang Esser, "Direct Montoring of Temperatures Protects Speed-Regulated Drive Motors" Maschinenmarkt, Würzburg, 103 (1997) 10

*[11] Dirk Meyer, "Switchgear for Systems with Reactive-Power Compensation", VER2100-934 Moeller GmbH, 2003

*[12] IEC / EN 60 947-4-1 and DIN VDE 0660-102 "Low-Voltage-Switchgear Part 4-1: Electro-mechanical contactors and motor-starters "

*[13]Wolfgang Esser, "The task of current-limitation on motor-protective circuit-breakers" Maschinenmarkt, Würzburg, 103 (1997) 13

*[14] Wolfgang Esser, "Using xStart for efficient mounting and safe/secure wiring in modern switching installations", VER….
Moeller GmbH, 2004

* Translation of the title

Moeller addresses worldwide:
www.moeller.net/address
E-Mail: info@moeller.net

VER2100-937GB MDS/DM 067/04
Printed in the Federal Republic of Germany (07/04)
Article No.: 285552

4 015082 855529

Xtra Combinations

Xtra Combinations from Moeller offers a range of products and services, enabling the best possible combination options for switching, protection and control in power distribution and automation.

Using Xtra Combinations enables you to find more efficient solutions for your tasks while optimising the economic viability of your machines and systems.

It provides:
- flexibility and simplicity
- great system availability
- the highest level of safety

All the products can be easily combined with one another mechanically, electrically and digitally, enabling you to arrive at flexible and stylish solutions tailored to your application – quickly, efficiently and cost-effectively.
The products are proven and of such excellent quality that they ensure a high level of operational continuity, allowing you to achieve optimum safety for your personnel, machinery, installations and buildings.

Thanks to our state-of-the-art logistics operation, our comprehensive dealer network and our highly motivated service personnel in 80 countries around the world, you can count on Moeller and our products every time. Challenge us!
We are looking forward to it!

MOELLER

Think future. Switch to green.